Large diameter seals

Powerful performance for heavy industries



Contents

The SKF brand now stands for more than ever before, and means more to you as a valued customer.

While SKF maintains its leadership as the hallmark of quality bearings throughout the world, new dimensions in technical advances, product support and services have evolved SKF into a truly solutions-oriented supplier, creating greater value for customers.

These solutions encompass ways to bring greater productivity to customers, not only with breakthrough application-specific products, but also through leading-edge design simulation tools and consultancy services, plant asset efficiency maintenance programmes, and the industry's most advanced supply management techniques.

The SKF brand still stands for the very best in rolling bearings, but it now stands for much more.

SKF – the knowledge engineering company

3 Large diameter seals
3 A wide range of sealing solutions for heavy industries

4 Metal-cased seals
4 General
4 HDS7
4 HDL seals
5 HDS1, HDS2 and HDS3
6 HDSA, HDSB and HDSC seals
7 HDSD and HDSE seals
8 Additional design options

9 Rubber outside diameter seals
9 General
9 SBF metal-inserted seals
10 HDS4 and HDS6 metal-inserted seals
11 HSF fabric-reinforced seals
12 HS all-rubber seals
12 HS solid seals
13 HS split seals

14 Additional design features
14 Spring connections
14 Spacer lugs
15 SKF Springlock
15 SKF Springcover
15 Bore-Tite

16 Sealing lip materials
16 General
16 Nitrile rubber (R)
16 Duralip (D)
17 SKF DURATEMP (H)
17 LongLife (V)
17 Polytetrafluoroethylene (PTFE)

22 Shaft requirements
22 General
22 Tolerances
22 Surface roughness
23 Surface finish
23 Hardness and surface treatment
23 Lead-in chamfers

24 Housing bore requirements
24 General
24 Tolerances
24 Surface roughness

26 Installing large diameter seals
26 Metal-reinforced seals
26 Seals without metal reinforcement
27 Installing split seals
28 Cover plates
28 Multiple HS seal installations
29 Multiple HDS seal installations
29 Installing PTFE seals

30 Customized sealing solutions
30 Size options of HDS metal-cased seals
31 Size options of HS seals

32 Large diameter wear sleeves
32 General
33 Designs and features
33 Using LDSLV designs
33 Installation
33 Removal

34 Product tables

116 SKF – the knowledge engineering company

Large diameter seals

A wide range of sealing solutions for heavy industries

Heavy industries like metal, construction, wind energy, forestry, mining and pulp and paper provide a challenging environment for large diameter radial shaft seals. Operating within a wide range of speeds, temperatures and environmental conditions, these seals need to reliably retain lubricants while preventing harsh contaminants from entering the system. Generally, seals for shaft diameters larger than 203 mm (8 in) are known as large diameter seals.

SKF large diameter seals are available in a wide range of designs and materials to meet the varying demands of each challenging application. The range includes heavy-duty metal-cased seals and rubber outside diameter seals with metal inserts or fabric-reinforcement as well as all-rubber types.



Metal-cased seals

General

SKF metal-cased seals are specially designed to withstand the extreme conditions encountered in heavy-duty applications. The designs include the highly engineered HDS7, the high-performance HDL seals and the reliable HDS1, HDS2 and HDS3 seals as well as the HDSA, B, C, D and E seals. These seals perform exceptionally well in the very contaminated environment of metal rolling mills, the high speed and high temperature environment of paper mills, as well as more universal applications like industrial gearboxes.

HDS7

The ingress of water and solid contaminants is a common cause of bearing failures. To solve this, SKF developed type HDS7 with enhanced exclusion capabilities (→ **fig. 1**). It was designed originally for grease lubricated bearings in rolling mill stands, where water and scale are a constant threat to bearing service life. It is also recommended for use in large gearboxes, coal pulverizers and cement grinders. Customers have reported that the HDS7 is easier to install and provides longer service life than similar seal types.

Type HDS7 features an optimized springless lip profile designed to retain lubricants and aggressively pump contaminants away from the lip. The springless lip concept of the HDS7 seals also reduces radial load, which otherwise can lead to elevated underlip temperature and increased seal wear.

Type HDS7 can also be equipped with a PTFE auxiliary lip positioned and directed as shown in **fig. 13** on **page 8** and/or an elastomer applied to the metal outside diameter, see **page 8** for further information.

The HDS7 seals are available in the sealing lip materials nitrile rubber for general use, Duralip for increased wear resistance in abrasive environments and SKF DURATEMP that combines improved wear resistance with increased temperature capability. It is important to note that the HDS7 is not available in the SKF fluoro rubber material LongLife. Please see **page 16** for further information on different sealing lip materials.

Spacer lugs are optionally available; see **page 14** for further information.

Type HDS7 is available on a made-to-order basis for all shaft sizes within the ranges stated in **table 8**, **page 30**. See also product tables, starting on **page 34**, for a selection of available sizes. Contact your SKF sales representative for additional information on availability.

HDL seals

The HDL (→ **fig. 2**) seals are premium metal-cased radial shaft seals for oil lubricated applications and are specially designed to operate in severe conditions including high speeds and temperatures, considerable runout and/or misalignment. The high-speed performance characteristics of the HDL seals make them an excellent choice for the severe operating conditions encountered in the rolls of paper-making machines.

The HDL seals feature a combination of a stainless steel garter spring and individual stainless steel finger springs around the entire circumference of the seal. This spring combination enables the seal to work effectively and provides long service life also under severe operating conditions.

Type HDLA is designed with an auxiliary lip for added protection against contaminants.

The HDL seals are available with the sealing lip made of either nitrile rubber, hydrogenated nitrile rubber or fluoro rubber (→ **page 16**), enabling the seals to perform well under a variety of operating speeds and temperatures. Fixed-width spacer lugs are available for both the HDL and the HDLA seals on a quotation basis.

HDS7

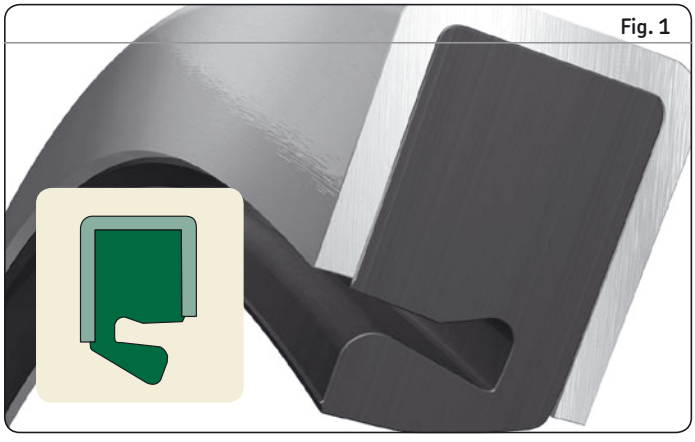

Fig. 1

HDL

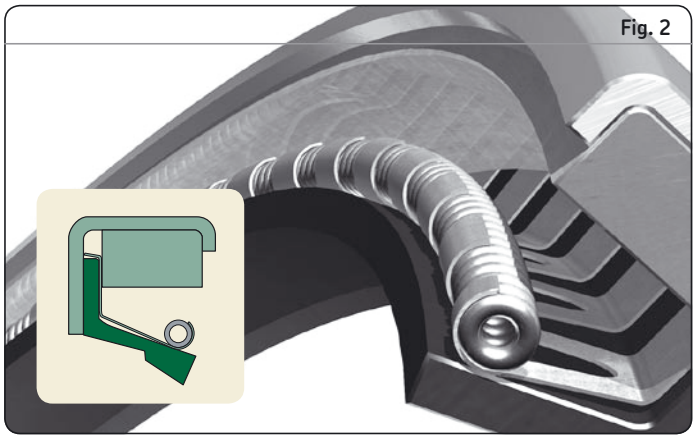

Fig. 2

A selection of available sizes can be found in the product tables starting on **page 40**. Contact your SKF sales representative for additional information on availability.

HDS1, HDS2 and HDS3

The most commonly used metal-cased seals are the HDS1, 2 and 3 seals, designed for general purposes. All three seal types are equipped with a heavy-duty metal case and a stainless steel garter spring.

The basic HDS1 type (→ **fig. 3**) has its spring installed in an SKF Springlock groove, (→ **fig. 28**, **page 15**). For blind installations, where spring displacement may go undetected, type HDS2 (→ **fig. 4**) adds an SKF Springcover (→ **fig. 29**, **page 15**) that retains the spring in the groove. Type HDS3 (→ **fig. 5**) adds adjustable spacer lugs. The lugs are optional on all other metal-cased HDS types, as are fixed width lugs, see **page 14**.

All three types can be equipped with a PTFE auxiliary lip, positioned and directed in either of the three ways shown in **fig. 11–13** and/or an elastomer applied to the metal outside diameter. See **page 8** for further information.

Nitrile rubber is standard for type HDS1 and HDS2 and Duralip for type HDS3. However, any of the types can be ordered in Duralip, SKF DURATEMP and LongLife.

The HDS1, 2 and 3 seals are manufactured on a made-to-order basis for all shaft sizes within the ranges stated in **table 8**, **page 30**. See also product tables, starting on **page 52**, for a selection of available sizes. Contact your SKF sales representative for additional information on availability.

Fig. 3

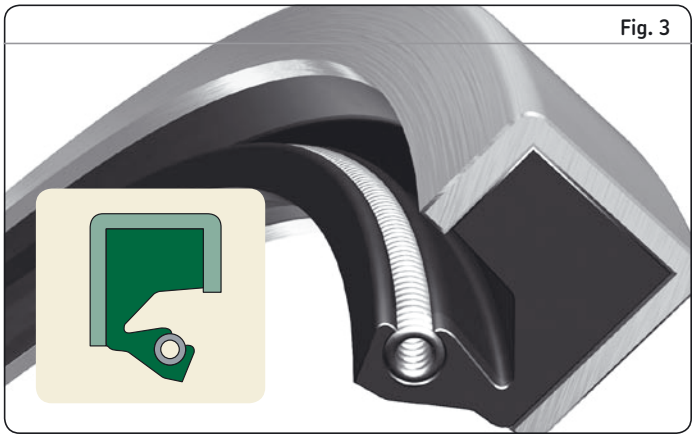

HDS1

Fig. 4

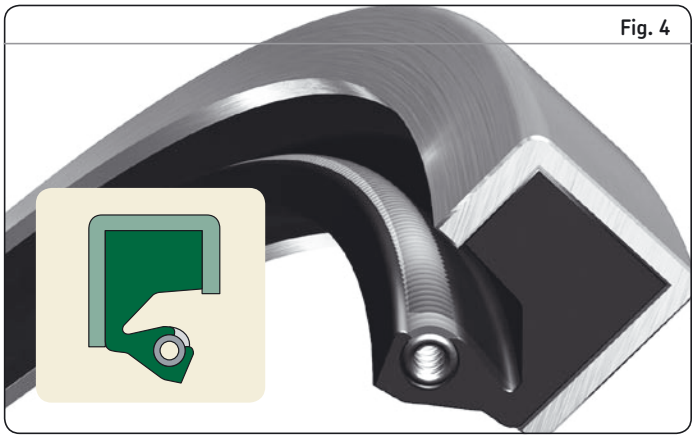

HDS2

Fig. 5

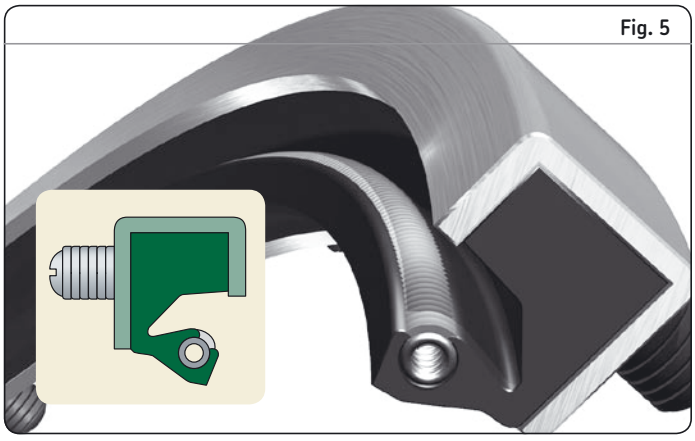

HDS3

HDSA, HDSB and HDSC seals

The HDSA, HDSB and HDSC seals are designed with an auxiliary lip in addition to the sealing lip (→ **fig. 6–8**). They are generally used where additional protection from contaminants is needed and where there is insufficient space for more than one seal. The chamfer of the auxiliary lip of HDSA seals faces the sealing lip, allowing easier shaft installation from the direction of the sealing lip. The chamfer of the auxiliary lip of HDSB seals faces away from the sealing lip, allowing easier shaft installation from the back, with the downside of somewhat reduced exclusion ability. The auxiliary lip of HDSC seals is located in front of the sealing lip with its chamfer facing the sealing lip to provide maximum exclusion ability.

The types HDSA2, HDSB2 and HDSC2 are designed with an SKF Springcover and the HDSA1, HDSB1, HDSC1 without an SKF Springcover (→ **fig. 29**, **page 15**).

The HDSA, HDSB and HDSC seals can also be equipped with an elastomer applied to the metal outside diameter, see **page 8** for further information.

All HDSA, HDSB and HDSC seals are available in nitrile rubber, Duralip, SKF DURATEMP or LongLife. For shaft sizes up to 1 190 mm (47 in), the standard auxiliary lip is made of Duralip.

The seals are available on a made-to-order basis for all shaft sizes within the ranges stated in **table 8**, **page 30**. See also the product tables starting on **page 62** for a selection of available sizes. Contact your SKF sales representative for additional information on availability.

Fig. 6

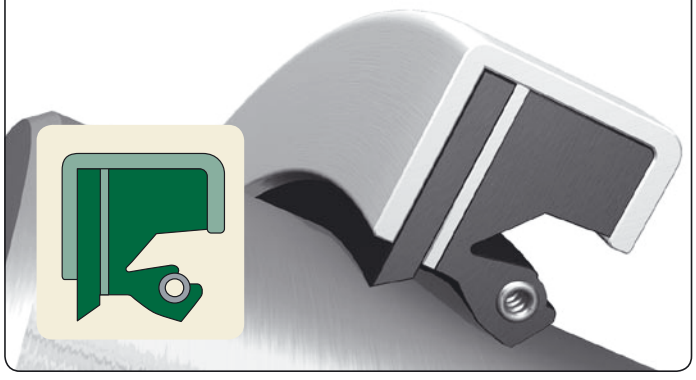

HDSA1

Fig. 7



HDSB1

Fig. 8

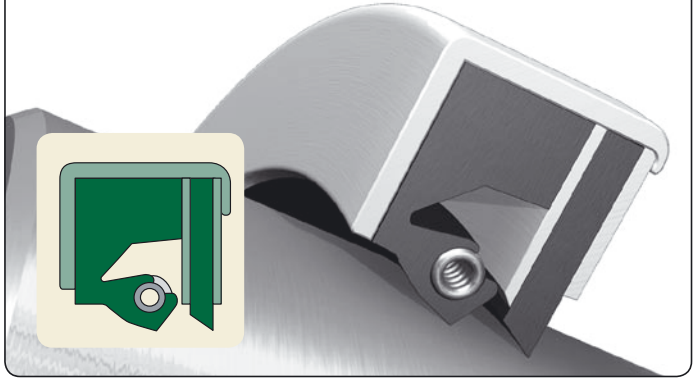

HDSC2

HDSD and HDSE seals

The HDSD seals (→ **fig. 9**) are designed with two sealing lips facing opposite directions. These seals are typically used in applications where two fluids must be kept separated. When using an HDSD seal, it is very important to provide a means to lubricate the sealing lips, i.e. the cavity between the sealing lips must be filled with grease prior to installation or during operation via lubrication holes drilled through the metal case into the cavity.

The HDSE seals (→ **fig. 10**) feature two sealing lips facing the same direction. They are typically used when a back-up seal otherwise would be needed for retention or exclusion purposes. As with the HDSD seals, a means of lubrication between the sealing lips is necessary for a proper sealing function.

The HDSD and HDSE seals are available with an SKF Springcover (HDSD2, HDSE2) or without an SKF Springcover (HDSD1, HDSE1), (→ **fig. 29**, **page 15**). All of them are available in nitrile rubber, Duralip, SKF DURATEMP or LongLife.

HDSE seals can also be equipped with a PTFE auxiliary lip positioned and directed in either of the three ways shown in **fig. 11–13** on **page 8**.

The HDSD and HDSE seals are available on a made-to-order basis for all shaft sizes within the ranges stated in **table 8**, **page 30**. See also the product tables starting on **page 68** for a selection of available sizes. Contact your SKF sales representative for additional information on availability.

HDSD1

Fig. 9

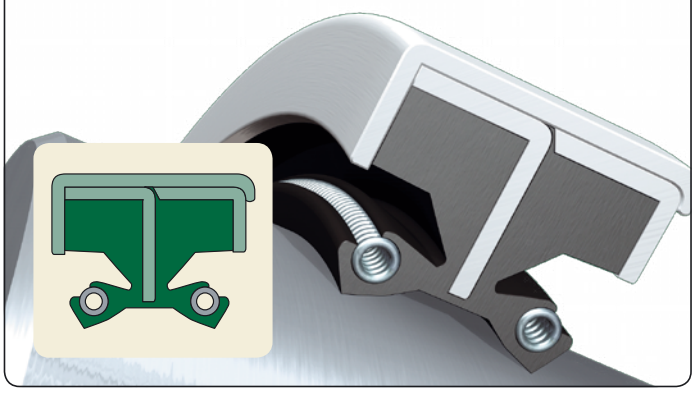

HDSE1

Fig. 10



Additional design options

The HDS1, HDS2, HDS3, HDS7 and HDSE seals can also be designed with an auxiliary PTFE lip to further protect the bearing and sealing lip(s) against dust particles in heavily contaminated environments. To serve this purpose, the PTFE lip is positioned and directed in either of the ways shown in **fig. 11** and **13**. The PTFE lip can also be used to provide additional lubricant retention and is then positioned as shown in **fig. 12**.

The PTFE lip is clamped between the metal case and the rubber seal body without significantly increasing the total seal width. It can withstand wear, chemical attack and dry running and helps improve seal performance with only a minimum of friction torque. The design with a PTFE auxiliary lip is a particularly effective solution when combined with a sealing lip made of the SKF fluoro rubber compound LongLife.

The letters F, G and H in the product name indicate a PTFE auxiliary lip design including the lip's position and direction; see for example the HDSF2 (→ **fig. 11**).

The HDS1, HDS2, HDS3, HDS3, HDS7, HDSA, HDSB and HDSC seals are available with an elastomer applied to the outside diameter for use in applications with bore temperatures up to 100 °C (210 °F), (→ **fig. 14**). The elastomer accommodates imperfections in the housing bore surface, improving service life and performance of both seal and equipment. The rubber outside diameter also reduces the risk of damage to the housing during installation and removal. This design option is indicated by the letter K in the product name; see for example the HDS2K.

Fig. 11



HDSF2 with lip position and direction to provide additional contaminant protection

Fig. 12



HDSG2 with lip position and direction to provide improved lubricant retention

Fig. 13



HDSH2 with lip position and direction to provide maximum contaminant protection

Fig. 14



An HDS2K seal with an elastomer applied to the outside diameter

Rubber outside diameter seals

General

The range of SKF rubber outside diameter seals includes metal-inserted, fabric-reinforced and all-rubber designs. The fabric-reinforced and all-rubber designs are available as solid or with an open joint or split.

Rubber outside diameter seals offer a number of important operating and installation benefits and are especially appropriate for split housings. The rubber prevents damage to the housing bore during installation, which otherwise can cause bypass leakage. Compared to metal-cased seals, the rubber outside diameter seals can tolerate higher surface roughness in the housing bore. They also resist corrosion and do not seize in the bore even years after installation.

Thanks to lower press-in forces, rubber outside diameter seals are often easier to install than metal-cased seals. They can be installed by hand or with simple tools even when the diameters are very large. This is especially true of the fabric- reinforced and all-rubber designs. Furthermore, in the case of split seals, there is no need to remove the shaft or other machine components when replacing the seals.

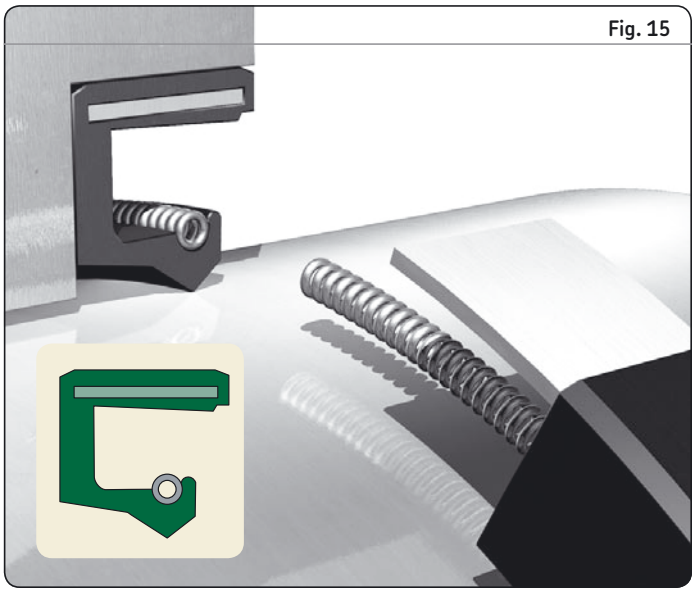

Fig. 15

SBF

SBF metal-inserted seals

Type SBF (→ **fig. 15**) is spring-loaded and designed with a flexible metal stiffening ring that allows the seal to be installed without the use of a cover plate. The SBF seal can be used as an upgrade to fabric-reinforced seals for many applications that are either grease or oil lubricated. SBF seals are available in both nitrile and fluoro rubber with an optional SKF Springcover (→ **fig. 29**, **page 15**).

A selection of available SBF seal sizes can be found in the product tables starting on **page 70**. Contact your SKF sales representative for additional information on availability.

HDS4 and HDS6 metal-inserted seals

The HDS4 seals (→ **fig. 16**) feature a patented moulded-in garter spring that cannot be displaced during difficult installation. The seals provide very good oil retention while minimizing wear on the shaft. HDS4 seals are used in, for example, the high-speed applications found in the pulp and paper industry. The HDS6 seals (→ **fig. 17**) feature a springless version and are designed for grease retention and contaminant exclusion. Both types are available in nitrile rubber as standard. They are also available in any of the sealing lip materials used for the metal-cased HDS seals.

Both the HDS4 and the HDS6 seals are equipped with moulded 12,7 mm (0.5 in) spacer lugs that can be trimmed or removed if necessary.

Contact your SKF sales representative for information on availability.

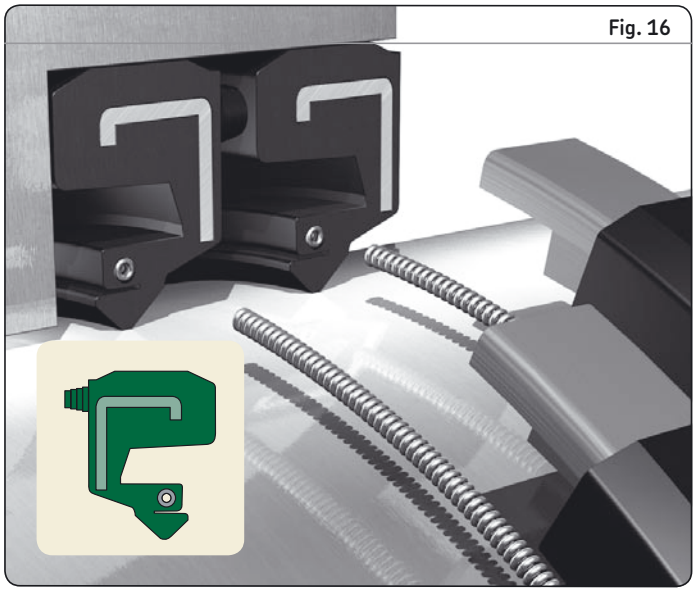

Fig. 16

HDS4

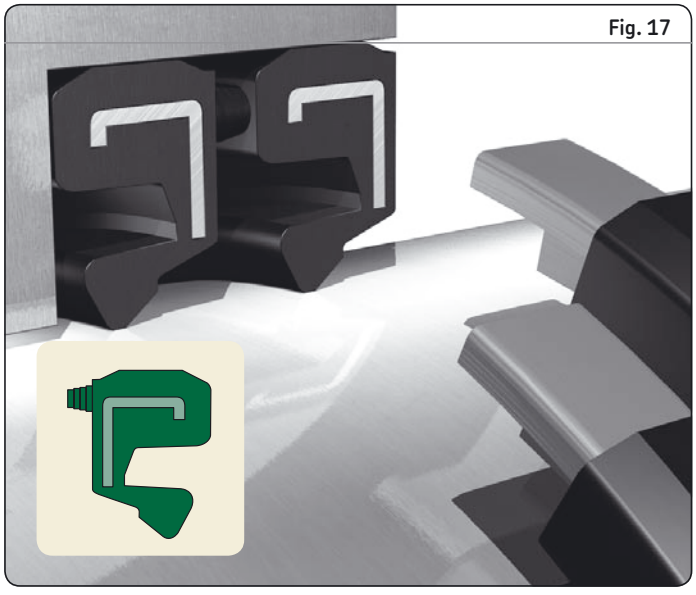

Fig. 17

HDS6

HSF fabric-reinforced seals

The spring-loaded HSF seal series consists of the HSF5, HSF6, HSF7 and HSF8 solid seal types and their split versions HSF1, HSF2, HSF3 and HSF4 (→ **fig. 18–20**). There is also a pressure profile type, HSF9, in solid version only. These seals are mainly used in heavy-duty applications like gear drives, propeller shafts, cold and hot mill work rolls, pumps, paper machinery, etc.

The HSF5, HSF6 and HSF7 types have a strong, flexible fabric-reinforced rubber back instead of a metal case. The HSF5 is the basic single-lip type. Type HSF6 adds radial lubrication grooves in the back of the seal and the HSF7 adds a circumferential lubrication groove. The HSF4 and HSF8 types are designed with an auxiliary lip for additional protection against contaminants.

Threaded spring connections are standard for all HSF seals (→ **fig. 26a**, **page 14**). For the split versions, a hook-and-eye connection can also be specified (→ **fig. 26b**, **page 14**).

All HSF seals are finished oversize to the housing bore to allow proper compression and stability. A cover plate is required to properly install and apply all HSF seals (→ **fig. 37–38**, **page 28**). The plate creates an axial preload to provide reliable static sealing performance. The plate should also be designed to avoid seal distortion during installation. HSF seals are available in nitrile rubber, hydrogenated nitrile rubber and fluoro rubber materials.

A selection of available HSF seal sizes can be found in the product tables starting on **page 72**. Contact your SKF sales representative for additional information on availability.



HSF5 (solid)
HSF1 (split)



HSF6 (solid)
HSF2 (split)



HSF7 (solid)
HSF3 (split)

HS all-rubber seals

The HS seals, available in solid and split executions, are all-rubber seals, designed without any reinforcement. The seals are finished oversize to the housing bore to allow proper compression and stability. A cover plate (→ **fig. 37–38**, **page 28**) is required to compress the seal within the cavity, helping to stabilize the seal, close the split joint (if any) and prevent leakage.

A garter spring located in the SKF Springlock groove (→ **fig. 28**, **page 15**) provides the appropriate radial load against the shaft.

The HS seals are available in nitrile rubber, Duralip, SKF DURATEMP or LongLife on a made-to-order basis for all shaft sizes within the ranges stated in **table 9**, **page 31**. See also product tables starting on **page 98** for a selection of available sizes. Contact your SKF sales representative for additional information on availability.

HS solid seals

The range of standard solid HS seals starts at 203 mm (8 in) shaft size but does not have an upper size limit.

Type HS4 (→ **fig. 21**) is an all-rubber solid seal, designed with a spring-loaded sealing lip. It features an SKF Springlock (→ **fig. 28**, **page 15**) and is recommended for vertical and horizontal shafts. For proper fit, a cover plate is required (→ **fig. 37–38**, **page 28**).

Type HS5 (→ **fig. 22**) has the same design as type HS4 with the addition of an SKF Springcover (→ **fig. 29**, **page 15**) to hold the spring in place during installation and to protect it against contaminants.

Both types have a threaded spring connection (→ **fig. 26a**, **page 14**).

HS4



Fig. 21

HS5

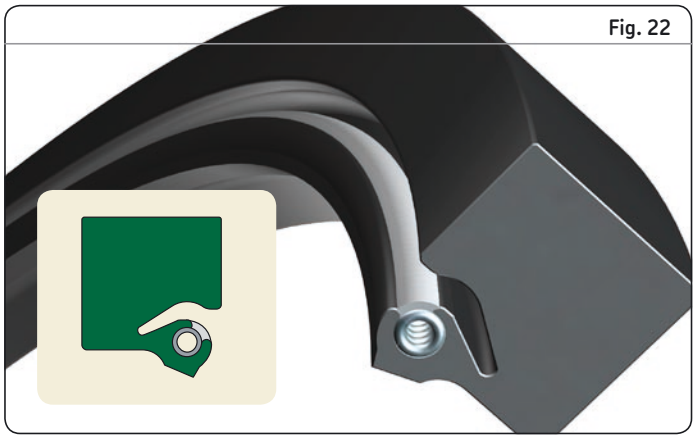

Fig. 22

HS split seals

In applications where shaft removal is impractical, HS all-rubber split seals are an excellent choice. They are simply placed around the shaft and pushed into the housing bore with the split placed at the 12 o'clock position. The seals are then held firmly by a cover plate that compresses the split joint together.

HS split seals perform best with grease or heavy lubricants, but also with light lubricants if the level of lubricant is kept well below the shaft centre line, which is particularly important at considerable surface speeds. Split seals are preferably installed on horizontal shafts, but installation on vertical shafts is also possible in grease lubricated applications.

Type HS6 (→ **fig. 23**) is designed with a spring-loaded sealing lip and an SKF Springlock (→ **fig. 28**, **page 15**). The HS6 seal features a separate loose spring and a hook-and-eye spring connection unless otherwise specified (→ **fig. 26b**, **page 14**). For proper fit, a cover plate is required (→ **fig. 37–38**, **page 28**).

The HS7 seal (→ **fig. 24**), designed for grease lubrication only, has a spring-loaded sealing lip and is equipped with both an SKF Springlock and an SKF Springcover (→ **fig. 28–29**, **page 15**). A control-wire spring connector is used to join the two ends of the seal together (→ **fig. 26c**, **page 14**). The spring is completely enclosed and the connection is made by running the control wire into the centre of the spring coil across the split (butt joint). Spring tension to hold the sealing lip on the shaft is built-in at the factory. For proper fit, a cover plate is required. Due to the unique design that permits easier installation, please note that a gap may occur at the joint even after the cover plate is installed. Special attention is necessary to place at the 12 o'clock position during installation. Type HS7 does not have the high performance characteristics as other HS types, but it is the easiest to install.

Type HS8 (→ **fig. 25**) is designed with a spring-loaded sealing lip, an SKF Springlock, an SKF Springcover (→ **fig. 29**, **page 17**) and a hook-and-eye spring connection (→ **fig. 26b**, **page 14**). The spring is entirely enclosed except for a small portion on either side of the split. The HS8 seal provides the most effective sealing performance of all the split seal types and is the preferred design for retaining low viscosity lubricants and for water exclusion. Type HS8 performs best on horizontal shafts, but may also be used on vertical shafts if not flooded with lubricant. For proper fit, a cover plate is required.

Fig. 23



HS6

HS7

Fig. 24

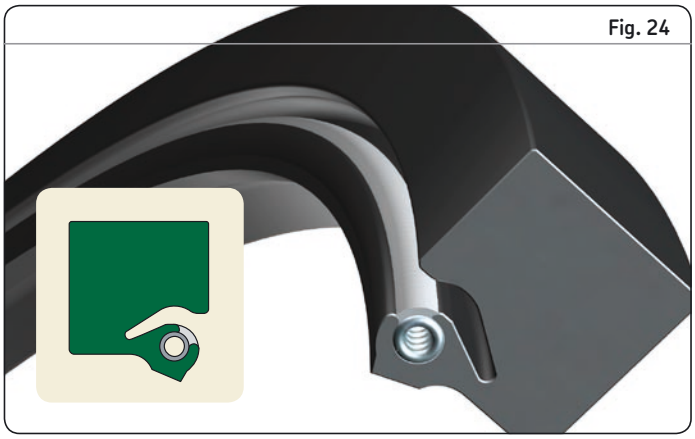

HS8

Fig. 25

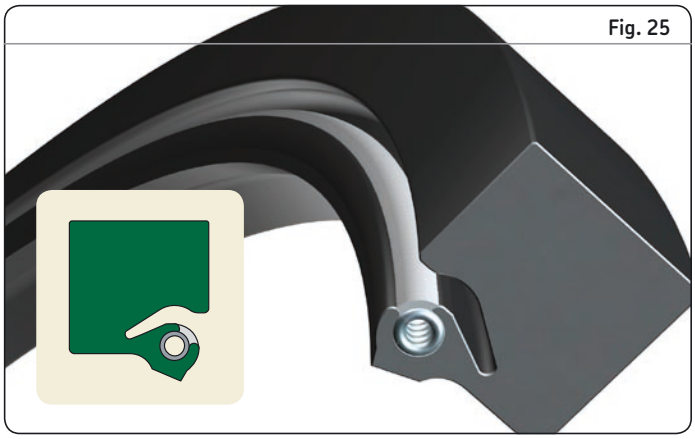

Additional design features

Spring connections

There are different ways to connect the stainless steel garter springs of the HS and HSF seals. A threaded spring connection (→ **fig. 26a**) is used for the solid HS types as well as for all HSF types unless otherwise specified. A hook-and-eye spring connection (→ **fig. 26b**) is used for the HS6 and HS8 seals. The special control-wire connection (→ **fig. 26c**) is only available for HS7 and should not be used for oil lubricated applications.

Spacer lugs

Spacer lugs may be furnished on all metal-cased designs to separate seals in multiple installations and to provide space for sealing lip lubrication (→ **fig. 27**).

Traditional fixed-width lugs for metal-cased HDS seals are 9,5 mm (0.375 in) in diameter and are available in widths from 3,2 mm (0.125 in) to 12,7 mm (0.5 in) in increments of 1,6 mm (0.063 in). The fixed-width lug is an available option for all metal-cased seals except for the HDS3. All HDS3 seals are supplied as standard with adjustable lugs, allowing the user to adjust lug widths on-site to suit the application requirements.

All standard adjustable lugs are now 9,5 mm (0.375 in) in diameter and 9,5 mm (0.375 in) in width. They can be adjusted to smaller widths in 1,6 mm (0.063 in) increments by removing the steel washers. The lugs may also be removed entirely. Longer, adjustable lugs, with a width of 12,7 mm (0.5 in), are available on request, but it can be more difficult to reduce their width.

Certain small seal cross sections may require special narrow diameter lugs, 5,3 mm (0.210 in), with a width range of 1,6 to 3,2 mm (0.063 to 0.125 in)

The lugs are placed around the heel of the seal in four, six or eight equally spaced locations, depending on the seal's outside diameter (→ **table 1**).

Fixed lugs are available for HDL seals on request.

Table 1

Number of spacer lugs needed

Spacer lugs	Seal outside diameter			
	from	incl	from	incl
–	mm		in	
4		762		30
6	762	1 143	30	45
8	1 143		45	

Spring connections

Fig. 26

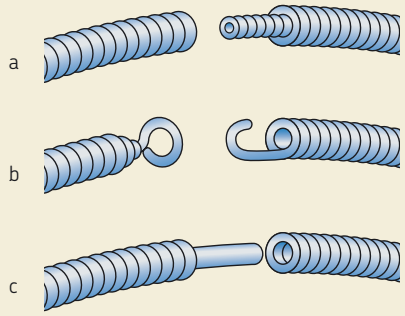

Spacer lug

Fig 27

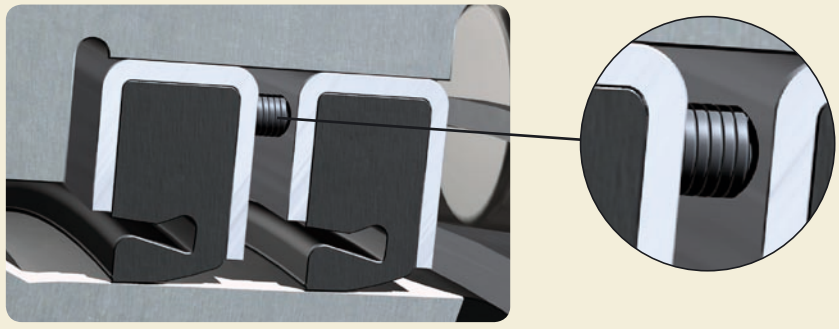

SKF Springlock

SKF Springlock is a sealing lip feature that surrounds 270° of the garter spring's diameter (→ **fig. 28**). The SKF Springlock helps hold the spring in position during installation and removal. It is standard on all HS seals and the spring-loaded, metal-cased HDS seals.

SKF Springcover

In applications where dirt, water or other contaminants may pose serious problems or where vibrations could displace the spring, an SKF Springcover can be specified. SKF Springcover is a flexible covering over the exposed portion of the stainless steel garter spring (→ **fig. 29**). It protects the spring without adversely affecting the spring's capability.

Bore-Tite

Bore-Tite is a water-based acrylic sealant available on most SKF metal-cased seals. The sealant is used as a coating on the outside diameter of the seal (→ **fig. 30**). The Bore-Tite layer is pliable with a thickness of 0,03 to 0,07 mm (0.0012 to 0.0028 in) to help accommodate small imperfections in the housing bore surface. Bore-Tite can be used at temperatures up to 200 °C (390 °F) and is compatible with most oils, greases, aqueous acids and alkalis, alcohols and glycols. Please note that Bore-Tite is not compatible with aromatics, ketones and esters. Incidental contact with these substances will, however, have little or no effect if wiped off quickly.

SKF Springlock

Fig. 28



SKF Springcover

Fig. 29



Bore-Tite

Fig. 30



Sealing lip materials

General

In addition to the design, the choice of materials can have a significant impact on seal performance and reliability. SKF seals are therefore produced in a variety of materials for both sealing lip, case and garter spring, to meet the varying demands of different applications.

The sealing lips of SKF seals are generally made of elastomer materials. However, thermoplastics such as polytetrafluoroethylene (PTFE) are gaining in importance. PTFE is mainly used for special seals intended for particular applications with demands on improved thermal or chemical resistance

SKF large diameter seals are generally produced from the materials listed in **table 2**. These materials have characteristic properties, making them particularly suitable for specific applications.

By changing the actual formulation and blending, it is possible to modify the characteristics of elastomers relative to

- resistance to swelling
- elasticity
- chemical resistance
- thermal resistance
- behaviour in the cold
- gas permeability.

Details about the chemical resistance of the seal materials to the various media encountered in operation can be found in the section "Chemical resistance" of SKF publication "Industrial shaft seals".

A code is used to identify the material of the sealing lip of SKF seals, see **table 2**. The code also appears in the designations of metric radial shaft seals. For seals manufactured in a combination of materials, a combination of code letters is used, like in RD (nitrile rubber and Duralip).

Table 2

SKF sealing lip materials

Composition of basic material	**Designation according to** SKF	ISO 16291 ASTM[1] D1418
Acrylonitrile-butadiene rubber (nitrile rubber)	R, RG	NBR
Hydrogenated acrylonitrile-butadiene rubber (SKF DURATEMP)	H	HNBR
Carboxylated acrylonitrile-butadiene rubber (Duralip)	D	XNBR
Fluoro rubber (LongLife)	V	FKM
Polytetrafluoroethylene	T	PTFE

[1] American Society for Testing and Materials

Nitrile rubber (R)

The term nitrile rubber is used in this publication for acrylonitrile-butadiene rubber (NBR). This material has very good engineering properties and is a general-purpose seal material. It is a copolymer produced from acrylonitrile and butadiene. It shows good resistance to the following media:

- Most mineral oils and greases with a mineral oil base
- Normal fuels such as gasoline, diesel and light heating oils
- Animal and vegetable oils and fats and hot water

Nitrile rubber also tolerates short-term dry running of the sealing lip. The permissible operating temperature range of nitrile rubber is –40 to +100 °C (–40 to +210 °F). For brief periods, temperatures of up to +120 °C (+250 °F) can be tolerated.

SKF also offers a special nitrile rubber compound that can be used in the temperature range –55 to +110 °C (–65 to +230 °F).

Duralip (D)

Duralip is a carboxylated nitrile rubber (XNBR) developed by SKF, combining the good technical properties of nitrile rubber with an increased resistance to wear (→ **diagram 1**, **page 18**). It is mainly used for large diameter seals. Seals made of this material should be chosen when abrasive contaminants like sand, soil and scale could reach the seal counterface on the shaft.

SKF DURATEMP (H)

SKF DURATEMP is a hydrogenated nitrile rubber (HNBR) developed by SKF, combining the wear resistance of Duralip with increased high-temperature resistance (**→ diagram 1–2**, **page 18**). SKF DURATEMP is also more resistant to chemical attack, weather, ageing and ozone. Mixtures of oil in air may have a negative effect. The upper operating temperature limit is +150 °C (+300 °F), which is significantly higher than that of ordinary nitrile rubber. SKF DURATEMP is mainly used for large diameter seals in demanding applications or where extended service life is required.

LongLife (V)

The fluoro rubber (FKM) compound LongLife is developed by SKF and is characterized by its very good wear, thermal and chemical resistance. Its resistance to weather and ageing from UV light and ozone is also very good and its gas permeability is very slight.

The compound LongLife has exceptionally good properties even under harsh environmental conditions and can withstand operating temperatures of up to +200 °C (+390 °F). The material is also resistant to oils and hydraulic fluids, fuels and lubricants, mineral acids and aliphatics as well as aromatic hydrocarbons that would cause seals made of many other materials to fail. Seals made of LongLife can also tolerate dry running of the lip for short periods. The seals should not be used in the presence of esters, ethers, ketones, certain amines and hot anhydrous hydrofluorides. Because of the compound's valuable properties, SKF produces metal-cased seals with sealing lips made of LongLife for all common shaft diameters from 203 mm to 1 575 mm (8 to 62 in) and all-rubber types for even larger diameters.

Polytetrafluoroethylene (PTFE)

PTFE is a thermoplastic polymer. Its chemical resistance is far superior to that of any other seal material and it is compatible with a wide range of lubricants. PTFE has a smooth dirt-resistant surface. Seals with PTFE lip elements can accommodate high surface speeds and offer extended service life. The seals can tolerate dry running and are particularly valuable in highly contaminated applications thanks to their excellent exclusion ability. PTFE is used for auxiliary seal elements or for primary sealing lips for special applications. For optimum performance, PTFE seal elements require a high-quality seal counterface and extra care during installation. The operating temperature range extends from –70 to +200 °C (–90 to +390 °F) and may go up to +260 °C (+500 °F).

IMPORTANT SAFETY NOTE: At temperatures above +300 °C (+570 °F), all fluoro elastomers and PTFE compounds give off dangerous fumes. This can occur, for example, if a welding torch is used when removing a bearing. Although the fumes are only produced at such high temperatures, once heated, the seals will be dangerous to handle even when they have cooled down.

If it is necessary to handle PTFE or fluoro elastomer seals that have been subjected to the high temperatures mentioned, the following safety precautions should be observed:

- Protective goggles and gloves should always be worn.
- The remains of seals should be put in an airtight plastic container marked "Material will etch".
- Comply with the safety precautions included in the material safety data sheet.

If there is contact with your skin, this should be washed with soap and plenty of water. Wash your eyes with plenty of water if these materials get into your eye. A doctor should always be consulted. This also applies if, during heating of the seals, the fumes have been inhaled.

Diagram 1

Wear resistance

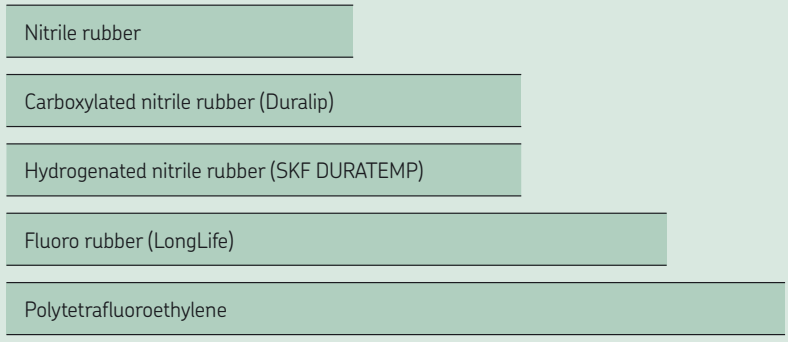

Diagram 2

Permissible operating temperatures

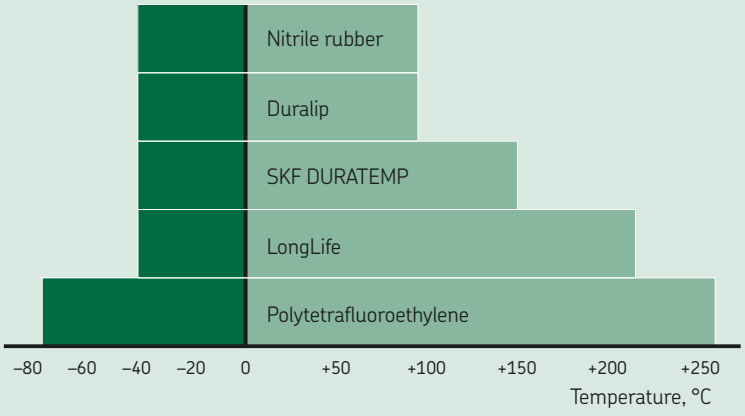

IMPORTANT SAFETY NOTE: At temperatures above +300 °C (+570 °F), all fluoro elastomers and PTFE compounds give off dangerous fumes.

Seal selection

SKF large diameter seals are produced in a wide range of different designs and materials to meet the demands of each application. To simplify the seal selection, **table 3** can be used as a general recommendation. See also **matrix 1** on **page 20–21**.

Table 3

Large diameter seals applications

Application	*General machinery* *Industrial gearboxes*	*Rolling mills, metals* *Hot strip mills* *Cold rolled plate mills* *Industrial gearboxes*	*Industrial gearboxes* *General machinery* *Rolling mills, paper mills*	*Special machinery* *Crushers, shredders, bailers, etc.*
Type	**General purpose**	**Water/scale exclusion**	**High speed** > 25,4 m/s > 5000 ft/min	**High Dynamic Runout (DRO) or Shaft-To-Bore Misalignment (STBM)**
HDS1–3, HDSD–E	3	2	x	2
HDS4, 6	2	2	3	2
HDS7	2	3	x	x
HDSA–C	3	2	x	3
HDL	2	2	3	3
HS4–8	2	x	2	3
SBF, HSF	3	1	x	x

1 = Good solution 2 = Better solution 3 = Best solution x = Not recommended

Large diameter radial shaft seals, permissible operating conditions

Standard design (preferred design)	Other basic designs	Material code	Operating temperature range		Pressure differential
			°C	°F	MPa (psi)
 HDS7	 HDS6	R D H	–40 to +100 –40 to +100 –40 to +150	–40 to +210 –40 to +210 –40 to +300	0
 HDL	 HDLA	R H V	–40 to +100 –40 to +150 –40 to +200	–40 to +210 –40 to +300 –40 to +390	0,1 (15)
 SBF		R V	–40 to +100 –40 to +200	–40 to +210 –40 to +390	0,1 (15)
 HDS2	 HDS1 HDS3 HDS4	R D H V	–40 to +100 –40 to +100 –40 to +150 –40 to +200	–40 to +210 –40 to +210 –40 to +300 –40 to +390	0,1 (15)
 HDSA2	 HDSA1 HDSB2 HDSB1 HDSC2 HDSC1	R D H V	–40 to +100 –40 to +100 –40 to +150 –40 to +200	–40 to +210 –40 to +210 –40 to +300 –40 to +390	0,1 (15)
 HDSE2	 HDSE1 HDSD2 HDSD1	R D H V	–40 to +100 –40 to +100 –40 to +150 –40 to +200	–40 to +210 –40 to +210 –40 to +300 –40 to +390	0,1 (15)
 HS solid  HS5	 HS4	R D H V	–40 to +100 –40 to +100 –40 to +150 –40 to +200	–40 to +210 –40 to +210 –40 to +300 –40 to +390	0,07 (11)
 HS split  HS8	 HS6 HS7	R D H V	–40 to +100 –40 to +100 –40 to +150 –40 to +200	–40 to +210 –40 to +210 –40 to +300 –40 to +390	0
 HSF solid  HSF5	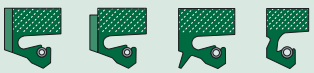 HSF6 HSF7 HSF8 HSF9	R V	–40 to +100 –40 to +200	–40 to +210 –40 to +390	0,03 (5)
 HSF split  HSF1	 HSF2 HSF3 HSF4	R V	–40 to +100 –40 to +200	–40 to +210 –40 to +390	0

Shaft-to-bore misalignment	**Runout** (Dynamic eccentricity of shaft)	**Maximum shaft surface speed**	**Ease of installation**	**Ability to seal low viscosity lubricants and exclude water**
mm (in)	mm (in)	m/s (ft/min)		
1,6 (0.062)	2,4 (0.093)	25 (>5 000) depending on the operating conditions	Excellent	Highly effective exclusion of water and solid contaminants and excellent retention of grease.
2,5 (0.1)	2,4 (0.093)	24 (>4 700) 25 (>5 000) 35 (>7 000)	Good	Excellent, including retention of light oils at high surface speeds and misalignment.
1,5 (0.06)	2,4 (0.093)	25 (>5 000)	Excellent	Excellent for oil or grease retention.
1,6 (0.062)	2,4 (0.093)	25 (>5 000)	HDS2, HDS3, HDS4: Excellent HDS1: Good	Excellent for oil or grease retention.
1,6 (0.062)	2,4 (0.093)	25 (>5 000)	Excellent to good, varies with equipment design.	HDSA/B: Excellent for oil or grease retention and exclusion of light to moderate contamination. HDSC: Good grease retention, increased protection against contamination.
1,6 (0.062)	2,4 (0.093)	25 (>5 000)	HDSD2, HDSE2: Excellent HDSD1, HDSE1: Good	HDSD: Excellent for oil or grease retention with exclusion of light to moderate contamination or separation of two media. HDSE: Good grease retention, increased protection against contamination.
1,6 (0.062)	2,4 (0.093)	HS4: 15 (3 000) HS5: 13 (2 500)	HS4: Good HS5: Good	HS4: Good HS5: Good
1,6 (0.062)	2,4 (0.093)	HS6: 10 (2 000) HS7: 7,5 (1 500) HS8: 10 (2 000)	HS6: Fair HS7: Excellent HS8: Good	HS6, HS8: Good to excellent for oil or grease retention HS7: Good (grease only)
1,5 (0.06)	2,4 (0.093)	15 (>3 000) depending on the operating conditions	Good to excellent	Excellent
1,5 (0.06)	2,4 (0.093)	15 (>3 000) depending on the operating conditions	Fair to good depending on the available space for installation	Good to excellent

Shaft requirements

General

To achieve reliable sealing performance and maximum service life, the counterface for radial shaft seals should meet the requirements outlined in the following. The counterface is the surface of a shaft, or sleeve installed on a shaft, against which the sealing lip will run, taking into account all permissible deviations and movements – surface "SL", (→ **fig. 31**), as well as an additional surface SL', which may be required in the case of repairs or inspection.

Tolerances

The diameter of the shaft d_1 at the counterface should be machined to the tolerances provided in **table 4** for metric shafts and **table 5** for inch shafts.

Out-of-roundness must be less than 0,005 mm (0.0002 in) at a maximum of 2 lobes or less than 0,0025 mm (0.0001 in) at a maximum of 7 lobes.

If components that are to be installed with an interference fit will pass over the counterface, the shaft diameter should be reduced by 0,2 mm (0.008 in). The seal that was originally chosen can still be used without adversely affecting seal performance.

Surface roughness

The surface roughness values of the counterface for radial shaft seals, calculated according to methods described in ISO 4288 (DIN 4768), should be kept within the following limits, specified in RMA OS-1-1:

R_a 0,2 to 0,43 µm (8 to 17 µin)
R_z 1,65 to 2,9 µm (65 to 115 µin)
R_{pm} 0,5 to 1,25 µm (20 to 50 µin)

The lower value for R_a is a minimum value that, if further lowered, will affect the lubricant supply to the sealing lip. The temperature rise caused by inadequate lubrication, particularly at higher circumferential speeds, will lead to hardening and cracking of the lip, which eventually will lead to premature seal

Counterface for radial shaft seals

Fig. 31

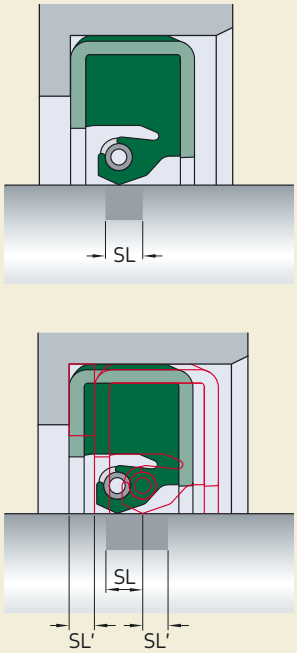

Table 4

Counterface tolerances for metric shafts

Shaft diameter		**Diameter tolerance (ISO h11) Deviation**	
d_1 over	incl.	high	low
mm		µm	
180	**250**	0	–290
250	**315**	0	–320
315	**400**	0	–360
400	**500**	0	–400
500	**630**	0	–440
630	**800**	0	–500
800	**1 000**	0	–560
1 000	**1 250**	0	–660
1 250	**1 600**	0	–780
1 600	**2 000**	0	–920
2 000	**2 500**	0	–1 100
2 500	**3 150**	0	–1 350
3 150	**4 000**	0	–1 650
4 000	**5 000**	0	–2 000

failure. If the counterface is too rough, there will be excessive sealing lip wear and seal service life will be shortened. If the value R_{pm} is exceeded the seal will leak or excessive seal lip wear may occur.

Surface finish

Plunge grinding is the preferred machining method to minimize the directionality (0±0,05°) on the seal counterface, as directionality could lead to leakage by pumping action, depending on the direction of rotation. When plunge grinding, whole number ratios of the grinding wheel speed to the work piece speed should be avoided. The grinding wheel should be dressed using a cluster head dressing tool and the smallest possible lateral feed, or a profile dressing roll without lateral feed. The negative influence of directionality in any particular case can only be ascertained by test running under conditions of alternating rotation.

The seal counter surface should be free of any damage, scratches, cracks, rust or raised sections and should be properly protected until final installation.

Hardness and surface treatment

Typically, the surface hardness of the seal counterface should be at least 30 HRC. If the shaft could be subject to damage during handling, this value should be increased to 45 HRC. Under certain conditions, where speeds are low, the lubrication is good and contaminants are absent, counter surfaces having a lower hardness may be suitable. Surfaces that are nitrided, phosphated or have a galvanized coating may also be suitable, but this must be determined for each specific case.

In cases where the seal counterface cannot meet the specifications outlined above, the use of a large diameter wear sleeve (LDSLV) is recommended. Detailed information on the LDSLV can be found in the section starting on **page 32**.

Lead-in chamfers

To be able to install radial shaft seals without damaging the sealing lip, SKF recommends chamfering or rounding the shaft ends or shoulders, see **table 6**.

Table 5

Counterface tolerances for inch size shafts

Shaft diameter Nominal d_1 over	incl.	**Diameter tolerance (RMA 0S-4)** Deviation high	low
in		in	
6	**10**	+0.005	–0.005
10		+0.006	–0.006

Table 6

Lead-in chamfers and radii

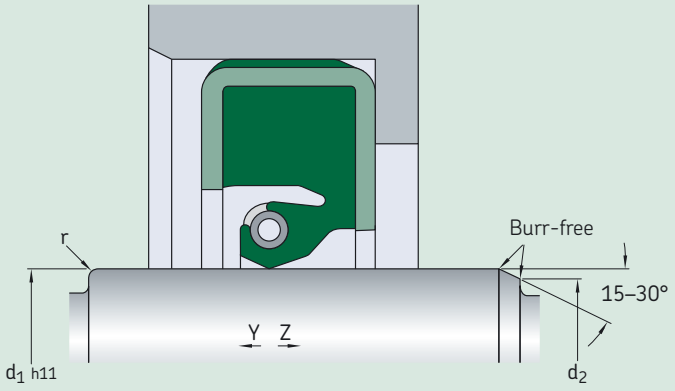

Shaft diameter Nominal d_1 over	incl.	over	incl.	**Diameter difference**[1] $d_1 - d_2$ min		**Radii** Seal without dust lip r_{min}		Seal with dust lip r_{min}	
mm		*in*		mm	*in*	mm	*in*	mm	*in*
130	**240**	*5.118*	*9.449*	7	*0.276*	1	*0.039*	2	*0.079*
240	**500**	*9.449*	*19.685*	11	*0.433*	2	*0.079*	3	*0.118*
500		*19.685*		13	*0.512*	5	*0.197*	5	*0.197*

[1] If the corner is blended rather than chamfered, the blended section should not be smaller than the difference in diameters $d_1 - d_2$

If the direction of installation is according to Z, the values provided in **table 6** should be adhered to. If the direction of installation is Y, the shaft end may be either rounded or chamfered.

If seals are to be installed over shaft shoulders or ends that have not been rounded or chamfered, SKF recommends using an installation sleeve, see section "Installing large diameter seals", **page 26**.

Housing bore requirements

General

To be sure that the seal can be installed without damaging it, the housing bore should have a 15 to 30° lead-in chamfer. The transition should be free from burrs and the transition r between the seal seating and the shoulder should be in accordance with the recommendations in **table 7**.

The depth of a metric housing bore B for metal-cased or metal-inserted seals should be at least 0,3 mm (0.012 in) larger than the nominal seal width b (→ **fig. 32**). The corresponding values for an inch housing bore B are 0.016 in (0,4 mm). The cylindrical section of the bore B_1 should have a width of at least 0,85b.

Seals without metal-reinforcement are finished oversize to the housing bore to enable proper compression and stability. The actual seal width is approximately 0,4 to 0,8 mm (0.016 to 0.032 in) wider than the bore depth B. For all-rubber HS seals, the bore depth tolerance should be ±0,13 mm (0.005 in) and ±0,10 mm (0.004 in) for the fabric-reinforced HSF seals.

Recesses in the housing shoulder A that must be considered during the design stage, can greatly facilitate removal of a seal from its housing bore; see figure in **table 7**.

Tolerances

The housing bore diameter D should be machined to tolerance H8, (→ **table 7**). Out-of-roundness should be 1 to 2 tolerance grades better than H8, depending on the operating conditions.

Surface roughness

The surface roughness (to ISO 4288 or DIN 4768) of the housing bore should be kept within the limits specified below. These limits apply for radial shaft seals with a rubber outside diameter, or a metal case coated with Bore-Tite.

R_a 1,6 to 6,3 µm (64 to 252 µin)
R_z 10 to 25 µm (400 to 1 000 µin)
R_{max} 25 µm (1 000 µin)

For seals with a metal case without Bore-Tite or similar coating, the limits are

R_a 0,8 to 3,2 µm (32 to 128 µin)
R_z 6,3 to 10 µm (252 to 400 µin)
R_{max} 10 µm (400 µin)

Fig. 32

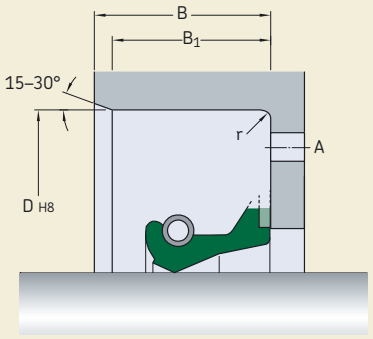

	HS/HSF	Metal-reinforced seals
B_1	0,85 b	0,85 b
B	b	b + 0,3

b = nominal seal width

Housing bore recommendations

Housing bore tolerances

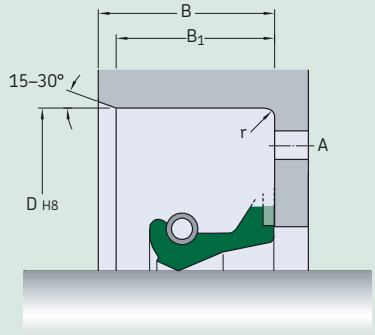

Housing bore for metric seals

Nominal diameter D over	incl.	Housing bore Deviation high	low	Fillet radii r max
mm		µm		mm
180	**250**	+72	0	0,8
250	**315**	+81	0	0,8
315	**400**	+89	0	0,8
400	**500**	+97	0	0,8
500	**630**	+110	0	0,8
630	**800**	+125	0	0,8
800	**1 000**	+140	0	0,8
1 000	**1 250**	+165	0	0,8
1 250	**1 600**	+195	0	0,8
1 600	**2 000**	+230	0	0,8
2 000	**2 500**	+280	0	0,8
2 500	**3 150**	+330	0	0,8
3 150	**4 000**	+410	0	0,8
4 000	**5 000**	+500	0	0,8

Housing bore for inch-size seals

Nominal diameter D over	incl.	Housing bore Deviation high	low	Fillet radii r max
in		in		in
6	**10**	+0.002	–0.002	0.031
10	**20**	+0.002	–0.004	0.031
20	**40**	+0.002	–0.004	0.031
40	**60**	+0.002	–0.004	0.031

Installing large diameter seals

Metal-reinforced seals

To install metal-reinforced large diameter seals, first check the shaft and housing bore for proper specification and condition. Then coat both seal and bore lightly with a lubricant, preferably the same lubricant that will be used to lubricate the application. For large diameter seals, a special installation tool may not be practical. In these cases, do not hit the seal or seal case directly. Instead, use a wooden block, long enough to span the seal outside diameter. It is important, when using this method, to apply hammer-blows evenly and sequentially to the wood piece around the seal circumference, to prevent the seal from tilting or skewing. SKF also recommends the use of a dead blow hammer for full energy transfer with less shock (→ **fig. 33**).

In some applications, the housing is designed for two seals in tandem, or a seal might have to be recessed further into the bore depth. In those cases, first set the seal flush with the housing using the method described above. Then use a shorter piece of wood to drive the seal deeper into the bore utilizing a sequential pattern (→ **fig. 34**).

Seals without metal reinforcement

Be sure that shaft surface and housing bore are clean and that they meet the demands specified in chapters "Shaft requirements" and "Housing bore requirements". Special care must be taken to avoid nicks and burrs on the shaft and to make sure that the spring is retained in the spring groove.

HS seals are installed in different ways depending on their main purpose in a specific application, i.e. either to retain lubricants or to exclude contaminants (→ **fig. 35**).

Use a dead blow hammer

Fig. 33

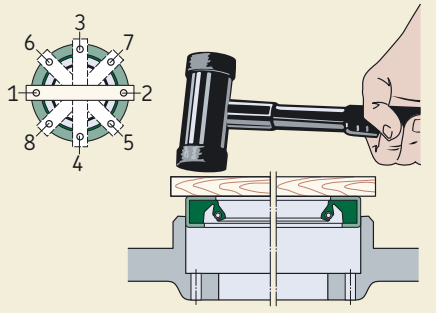

Installing deep into the bore

Fig. 34

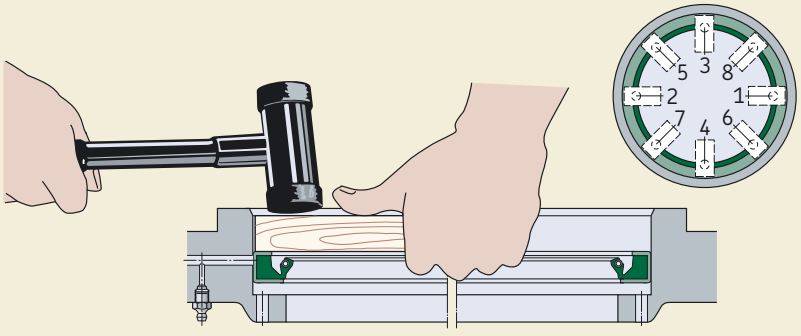

Ways of installing HS seals

Fig. 35

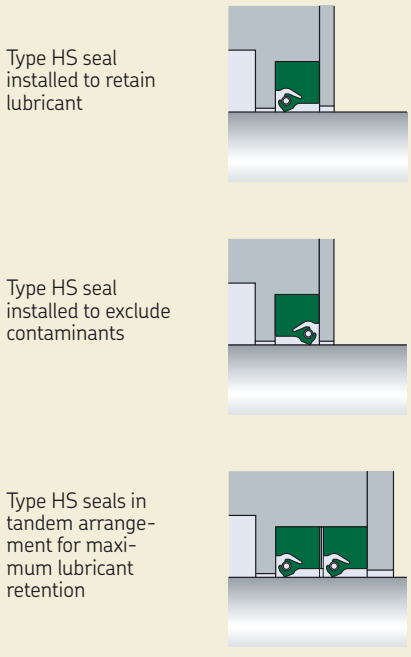

Installing split seals

Coat both seal and housing bore lightly with a lubricant, preferably the same lubricant that will be used to lubricate the application (**A**, **fig. 36**).

Where appropriate, insert the spring in the SKF Springlock groove and position the spring connection, so that it is displaced with regard to the seal joint (**B**). This is standard with all HS8 seals.

Put the seal in the correct position on the shaft. Join the ends of the garter spring by using the spring connector (**C**).

Wind the spring ends together for the threaded type or draw the ends of the spring together and insert the hook into the eye, taking care not to over-stretch the spring in the process, as this might impair seal performance. When using a control-wire connector, draw the seal ends together and insert the control wire into the centre of the spring coil.

Position the seal joint on the shaft so that it is at the 12 o'clock position and push both ends of the joint into the housing bore (**D**). Do not insert only one free end and do not wrap the remainder of the seal profile around the shaft as an excess length can result, making installation into the bore difficult or impossible.

Starting at the 3 and 9 o'clock positions, push the rest of the seal into position (**E**), finishing simultaneously at the 6 and 12 o'clock positions. For shaft diameters of 1 200 mm (47 in) and above, it may be preferable to fix the seal at the 12, 3, 6 and 9 o'clock positions before locating the remaining sections of the seal.

The seal in the housing bore should be pushed until it contacts the housing shoulder, using a small block of wood.

Check the seal, particularly at the joint.

Install the cover plate (see following section) on the housing face. Tighten the bolts evenly until the end cover abuts the housing face (**F** and **G**).

Fig. 36

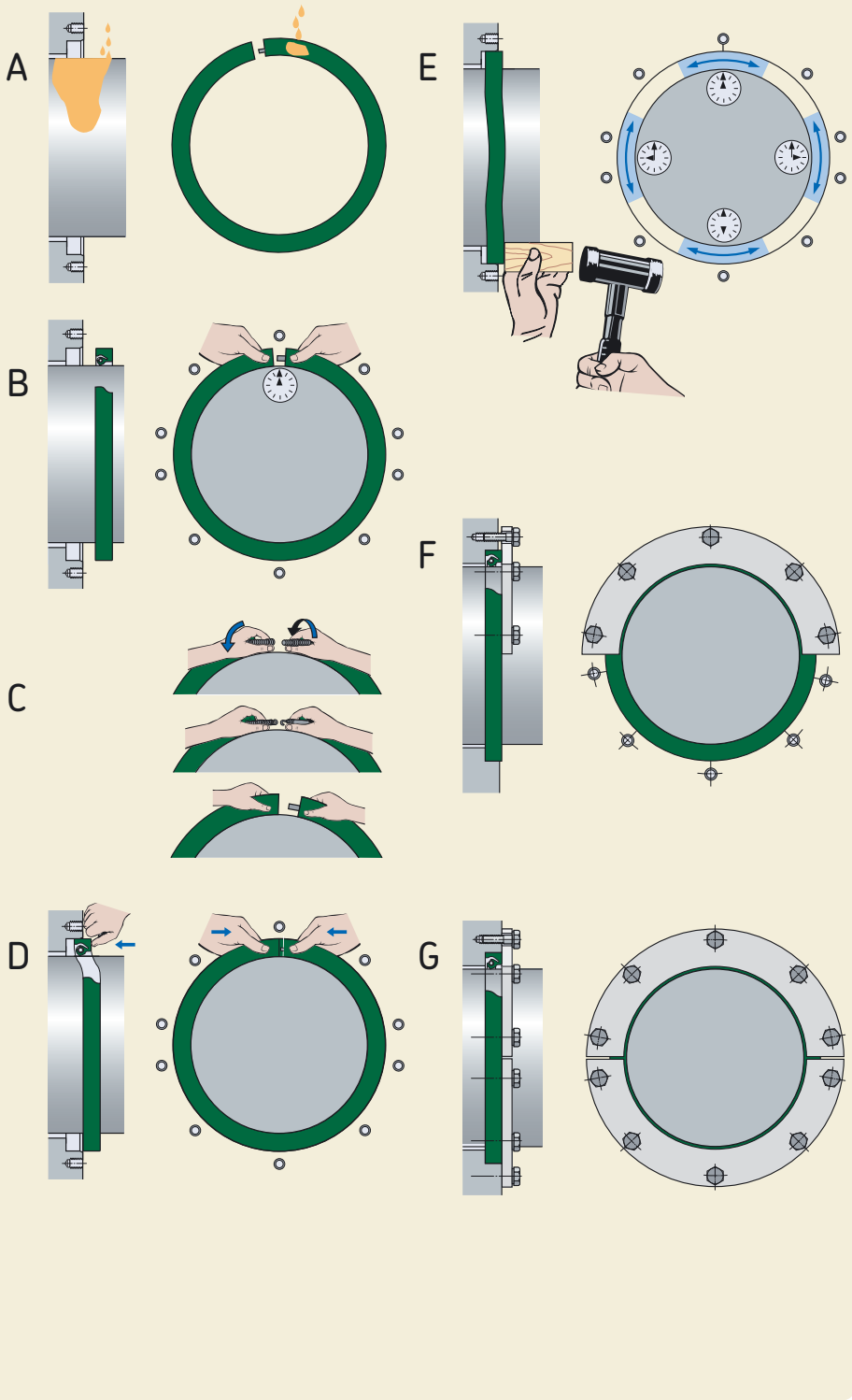

Installing split HS seals

Cover plates

All HS and HSF seal types, split and solid, are finished oversize to the housing bore to allow proper compression and stability. The end user is required to fabricate and use a cover plate for a proper fit (→ **fig. 37–38**). The cover plate provides axial compression and supplements a radial press fit to achieve maximum seal performance. It should be thick enough not to bend or distort. Generally, a thickness of 6,35 to 12,7 mm (0.250 to 0.500 in) is sufficient.

The plate should be fastened with bolts, no more than 150 mm (6 in) apart, on a bolt circle located as close to the seal housing bore as practical. The cover plate should be flat and the housing bore depth uniform. Splitting the cover plate at 180° will make seal replacement easier, particularly in confined areas.

To block surges of lubricant towards the seal from the inside and to protect the seal from damage from the outside, it is recommended that the cover plate inside diameter be as close as practical to the shaft. Generally, 6,35 mm (0.250 in) greater than shaft diameter is sufficient to accommodate shaft-to-bore misalignment and runout.

In applications where supplementary sealing is necessary, and it is impractical to machine the original housing to provide a seal cavity, a seal cavity can be incorporated into a new plate that is bolted into place as illustrated (→ **fig. 37–38**).

Multiple HS seal installations

When installing two split all-rubber HS seals in one cavity, the locations of the split joints should be staggered by 30° to 60° to minimize the risk of leakage through the joint. The splits should be located towards the top of the bore. Grease the cavity between the seals to provide lubricant to the outer seal lip.

Where two HS seals, split or solid, are to be installed in the same housing bore, a spacing washer must be placed between the two seals (→ **fig. 39–41**). Suitable washer dimensions can be determined based on the shaft and housing bore diameters, d_1 and D, respectively:

washer inside diameter
= d_1 + 6 to 10 mm (0.236 to 0.394 in)

washer outside diameter
= D – 0,5 to 1,5 mm (0.020 to 0.059 in)

The washer width must be determined with reference to the conditions but should always be such that lubrication holes can be provided in the circumference, or lubrication grooves in one side face to permit grease to be supplied from the housing to the sealing lips via a drilled passage and grease fitting (→ **fig. 42**). When determining washer width and the depth of the housing bore, it is also necessary to take into consideration the axial displacement required when clamping the seals.

Cover plate

Fig. 37

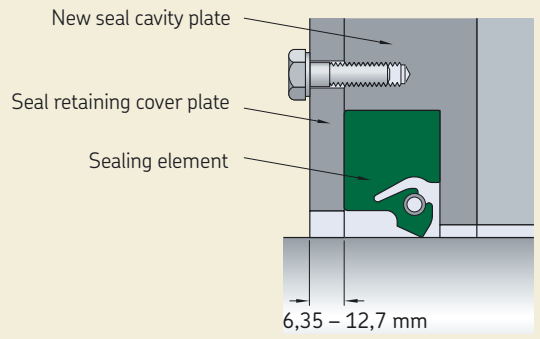

Cover plate recommendations

Fig. 38

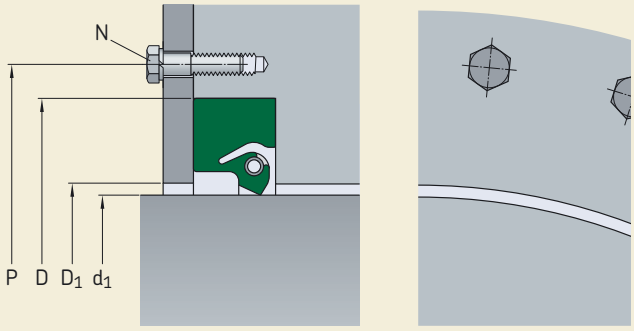

Inside diameter of cover: $D_1 \approx d_1 + 6 \ldots 8$ (mm)
Pitch circle diameter of screws: $P \approx 1{,}1\ D$ (mm)
No. of attachment screws: $N \approx 0{,}02\ P$

Multiple HDS seal installations

If two metal-cased radial shaft seals are to be installed in one housing bore, either in tandem or in an opposed back-to-back arrangement, care must be taken to be sure that neither of the sealing lips can run dry at any time. To reduce the risk of dry running, the free space between the seals should be filled with a suitable grease.

To avoid dry running, SKF recommends using spacer lugs or a spacing washer between the two seals. The spacing washer should be provided with lubrication holes (→ **fig. 39–41**), so that grease can be supplied to the space between the sealing lips via a grease fitting. No spacing washer is required when using HDS3 seals as these have spacer lugs built into the airside of the metal case (→ **fig. 43**). HDSD and HDSE seals can be supplied from SKF with holes pre-drilled in the metal case to mate with corresponding passages in the housing bore.

Installing PTFE seals

In order not to damage a PTFE seal element, special care must be taken during installation. If the seal is to be installed with the lip facing away from the shaft end, it can usually be pressed into the bore fairly easily. However, when installing the seal with the lip facing against the shaft end, SKF recommends using a cone type tool similar to the one shown in (→ **fig. 44**).

Fig. 39

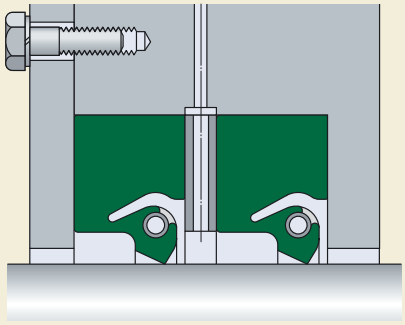

Spacing washer

Fig. 40

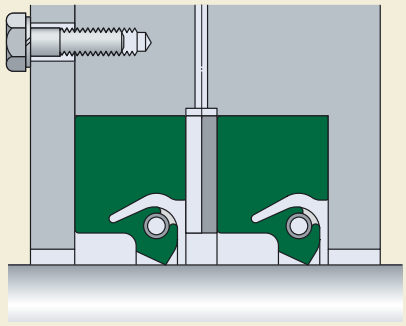

Spacing washer

Fig. 41

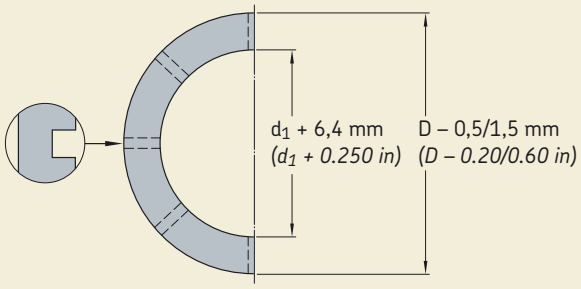

Details of spacing washer for central lubrication
A separator between two seals can be a slotted washer to provide lubrication circulation.

Grease fitting

Fig. 42

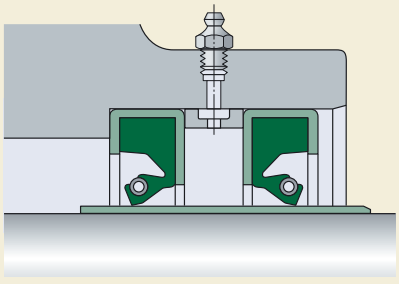

HDS2 and HDS3 with spacer lugs

Fig. 43

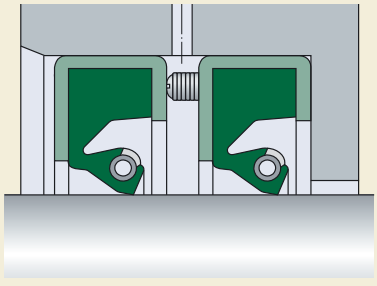

Installing PTFE seals

Fig. 44

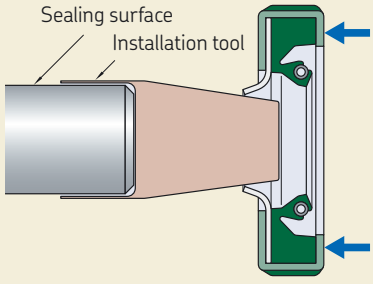

Customized sealing solutions

Size options of HDS metal-cased seals

To accommodate almost every application, all SKF metal-cased HDS seals are available on a made-to-order basis for all inch and metric shaft sizes within the ranges stated in **table 8**. The product tables starting on **page 34** list a selection of available sizes. Contact your SKF sales representative for additional information on availability.

Table 8

Standard sections for metal-cased HDS seal types

Types with metal outside diameter	Bore diameter		Shaft diameter		Difference between bore and shaft diameter		Width	
	from	to	from	to	from	to	from	to
	mm/*in*		mm/*in*		mm/*in*		mm/*in*	
HDS7, HDSH7	196,85 *7.750*	1 638,30 *64.500*	165,10 *6.500*	1 606,55 *63.250*	31,75 *1.250*	63,50 *2.500*	15,88 *0.625*	31,75 *1.250*
HDS1–3, HDSF1–3, HDSG1-3, HDSH1-3	196,85 *7.750*	1 638,30 *64.500*	165,10 *6.500*	1 606,55 *63.250*	31,75 *1.250*	76,20 *3.000*	15,88 *0.625*	31,75 *1.250*
HDSA1–2, HDSB1–2, HDSC1–2	196,85 *7.750*	1 219,20 *48.000*	165,10 *6.500*	1 189,74 *46.840*	31,75 *1.250*	76,20 *3.000*	21,36 *0.841*	38,10 *1.500*
HDSD1–2, HDSE1–2, HDSEF1–2, HDSEG1-2, HDSEH1-2	202,18 *7.960*	1 638,30 *64.500*	165,10 *6.500*	1 603,50 *63.130*	37,08 *1.460*	76,20 *3.000*	30,89 *1.216*	50,80 *2.000*

Types with rubber outside diameter	Bore diameter		Shaft diameter		Difference between bore and shaft diameter		Width	
	from	to	from	to	from	to	from	to
	mm/*in*		mm/*in*		mm/*in*		mm/*in*	
HDS7K, HDSH7K	201,62 *7.938*	1.643,08 *64.688*	165,10 *6.500*	1 606,55 *63.250*	36,52 *1.438*	76,20 *3.000*	15,88 *0.625*	31,75 *1.250*
HDS1–3K, HDSF1–3K, HDSG1-3K, HDSH1-3K	201,62 *7.938*	1.643,08 *64.688*	165,10 *6.500*	1 606,55 *63.250*	36,52 *1.438*	76,20 *3.000*	15,88 *0.625*	31,75 *1.250*
HDSA1–2K, HDSB1–2K, HDSC1–2K	201,62 *7.938*	1.643,08 *64.688*	165,10 *6.500*	1 606,55 *63.250*	36,52 *1.438*	76,20 *3.000*	15,88 *0.841*	31,75 *1.250*

Not all cross-sections and widths are possible with every shaft diameter. Contact SKF for availability on dimensions at the extreme limits or for sizes outside the standard range.

Size options of HS seals

HS seals are available in standard cross sections and widths according to the ranges stated in **table 9**. The product tables starting on **page 34** list a selection of available sizes. Contact your SKF sales representative for additional information on availability.

Table 9

Size options of HS seals

Difference between bore and shaft	Bore diameter[1]		Shaft diameter[2]		Bore depth[3]
	from	to	from	to	
mm/*in*			mm/*in*		
25,40 *1.000*	228,60 *9.000*	1 854 *73.000*	203,20 *8.000*	1 829 *72.000*	12,70; 15,88 *0.500; 0.625*
31,75 *1.250*	234,95 *9.250*	1 301 *51.250*	203,20 *8.000*	1 270 *50.000*	15,88 *0.625*
38,10 *1.500*	279,40 *11.000*	4 610 *181.500*	241,30 *9.500*	4 572 *180.000*	15,88; 17,48; 19,05 *0.625; 0.688; 0.750*
50,80 *2.000*	330,20 *13.000*	4 623 *182.000*	279,40 *11.000*	4 572 *180.000*	20,70 *0.815*

[1] Bore tolerance H8
[2] Shaft tolerance h11
[3] Tolerance ±0,1

Large diameter wear sleeves

General

Contaminants and polishing friction between a rotating shaft and a seal, over time, can result in severe shaft damage. Instead of repairing or replacing the damaged shaft, SKF recommends the use of large diameter wear sleeves (LDSLV) for shaft sizes in the diameter range 211,15 to 1 143 mm (8.313 to 45 in). SKF LDSLV are made to order to fit shaft sizes within the primary ranges stated in **tables 10** and **11**. A selection of possible sizes is listed in the product tables starting on **page 108**.

The use of LDSLV is recommended in applications where the operating conditions for the seals are difficult, particularly where solid contaminants can reach the seals, like in rolling mills, primary metal plants and in chemical and mineral plants.

In applications where seal wear and shaft damage can be expected, it is recommended that the large diameter wear sleeves are installed into the application already from the outset. It will then not be necessary to rework the shaft before installing a replacement sleeve and the original seal size can be used as the replacement.

Table 10

Primary dimension range of LDSLV3

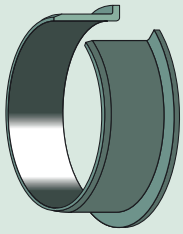

Shaft range over	incl.	**Width**[1] min	max
mm/*in*		mm/*in*	
211,15 *8.313*	736,60 *29.000*	17,48 *0.688*	63,50 *2.500*
736,60 *29.000*	1 143 *45.000*	25,40 *1.000*	63,50 *2.500*

[1] Overall, 38,1 to 50,8 mm (*1.5 to 2 in*) at 1 143 mm (*45 in*) shaft diameter

Contact SKF for large diameter sleeves outside the primary range

Table 11

Primary dimension range of LDSLV4

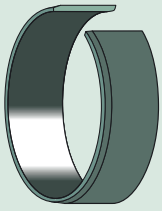

Shaft range over	incl.	**Width**[1] min	max
mm/*in*		mm/*in*	
211,15 *8.313*	736,60 *29.000*	12,70 *0.500*	63,50 *2.500*
736,60 *29.000*	1 143 *45.000*	19,05 *0.750*	63,50 *2.500*

[1] Overall, 38,1 to 50,8 mm (*1.5 to 2 in*) at 1 143 mm (*45 in*) shaft diameter

Contact SKF for large diameter sleeves outside the primary range

Designs and features

There are two designs of SKF large diameter wear sleeves; type LDSLV3 with a flange (→ **fig. 45**) and type LDSLV4 without a flange (→ **fig. 46**). Both types are made of high quality SAE 1008 carbon steel and chrome plated to enhance wear and corrosion resistance. The sleeve outside diameter is specially ground to provide a precision counter surface for the seal. The wall thickness of the standard sleeves is 2,39 mm (0.094 in). Other sleeve materials can be provided to meet the demands of a specific application.

Type LDSLV3 is designed with a flange to simplify final positioning of the sleeve. The width of the counterface for the seal is 6,35 mm (0.250 in) narrower than the total width of the sleeve. The flange adds a nominal 25,4 mm (1.000 in) over the shaft diameter. The flange height is 12,7 mm (0.500 in) for all sizes. Note that force should never be applied directly to the flange when installing type LDSLV3.

Type LDSLV4 has the same features as type LDSLV3 but without a flange. LDSLV4 is intended for applications where a flange could interfere with other components during installation, or where a wider contact surface for the seal is required.

Using LDSLV designs

There are two alternative ways of using SKF large diameter wear sleeves (→ **fig. 47**);

1. The sleeve is positioned on the shaft until it covers the damaged part and a new seal, designed for a 4,78 mm (0.188 in) larger shaft diameter, is used.
2. The shaft is machined down 4,78 mm (0.188 in) in diameter, the sleeve is installed and the original seal size is used.

The reworked shaft surface for the sleeve should have a surface roughness of between R_a 2,5 and 3,2 µm (100 to 125 µin)

IMPORTANT: The shaft tolerances for large diameter wear sleeves, due to their heated slip-fit installation, are different from those for radial shaft seals. Contact SKF for assistance if the sleeves are to be used in systems with sustained temperatures higher than 75 °C (170 °F) and surface speeds in excess of 20 m/s (3 950 ft/min).

Installation

SKF large diameter wear sleeves are designed for a heated slip-fit installation and must therefore be uniformly heated prior to installation on the shaft. The sleeve temperature should be approximately 180 °C (350 °F). Under no circumstances should the sleeve be heated to above 200 °C (400 °F). Any of the heating techniques normally used for bearings is suitable, such as induction heaters or heating cabinets.

The sleeves should be installed immediately after heating since they cool rapidly and could seize on the shaft before the correct position is achieved. Repositioning of the sleeves by impacts from hammers, etc. should be avoided or minimized and care taken not to damage the ground outside diameter or lead-in-chamfer.

Removal

To remove large diameter wear sleeves, it is recommended first to either heat them or to expand them by light hammer blows. The flange of type LDSLV3 should first be cut through at one point, using care not to damage the shaft surface.

LDSLV3

Fig. 45

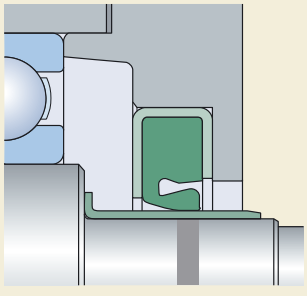

LDSLV4

Fig. 46

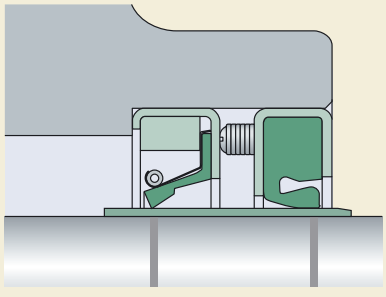

Using LDSLV designs

Fig. 47

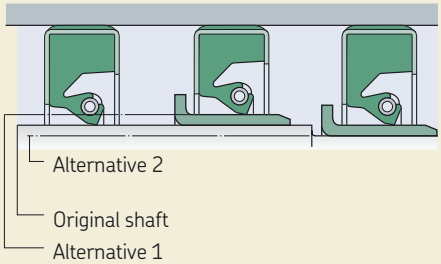

Radial shaft seals – HDS7 – metric dimensions

d_1 **200 – 1 250** mm

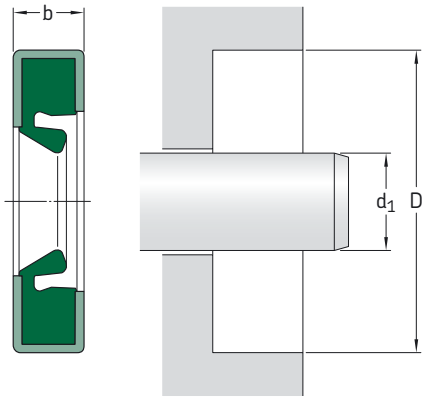

Please see **page 24–25** for housing bore requirements

Dimensions shaft d_1	bore D	nominal seal width b	Design	Lip material	Lug[1]	Designation
mm			–	–	–	–
200	230	15	HDS7	R		**CR 597496**
210	240	18	HDS7	D	4	**CR 597607**
220	250	15	HDS7	R		**CR 597497**
230	260	15	HDS7	R		**CR 597293**
235	270	15	HDS7	H		**CR 596345**
	270	16	HDS7	H		**CR 596344**
260	300	16	HDS7	R		**CR 1023250**
290	350	25	HDS7	R		**CR 596382**
300	340	18	HDS7	R		**CR 1181231**
	340	20	HDS7	R		**CR 1181240**
	344	20	HDS7	R		**CR 1181340**
310	350	20	HDS7	R		**CR 1220250**
320	380	28	HDS7	R		**CR 1259720**
330	370	20	HDS7	R		**CR 1456251**
346	375	15	HDS7	R		**CR 1362180**
360	404	20	HDS7	R		**CR 1417351**
364	406	17	HDS7	D		**CR 596393**
400	444	20	HDS7	R		**CR 1574250**
432	463	17	HDS7	R		**CR 1700520**
440	480	20	HDS7	R		**CR 1732259**
450	510	25	HDS7	R		**CR 1771720**
461	495	20	HDS7	H		**CR 1815180**
470	530	25	HDS7	R		**CR 1850700**
	530	28	HDS7	R		**CR 1850710**
500	550	20	HDS7	D	6	**CR 1985539**
515	555	20	HDS7	R		**CR 2027280**
520	570	22	HDS7	R		**CR 2047589**
530	580	20	HDS7	D	6	**CR 2086539**
	580	22	HDS7	R		**CR 2086500**
542	578	16	HDS7	D	4	**CR 2133181**
560	604	20	HDS7	R		**CR 2204380**
	610	20	HDS7	R		**CR 2204509**
	610	22	HDS7	R		**CR 2204510**
	620	29,34	HDS7	R		**CR 2204720**
590	630	20	HDS7	D	6	**CR 2322221**
	640	20	HDS7	R		**CR 2322681**
610	660	25	HDS7	R		**CR 2401511**
640	690	25	HDS7	R		**CR 2519511**
647	700	25	HDS7	H		**CR 2547541**
720	784	23	HDS7	R		**CR 2835782**
760	810	25	HDS7	R		**CR 2992510**
1 250	1 314	21,54	HDS7	R		**CR 4921799**

[1] Number of 12,7 mm adjustable spacer lugs

The product table only lists a selection of available sizes. These seals are made to order to fit any size request within the ranges stated in **table 8** on **page 30**

Radial shaft seals – HDS7 – inch dimensions

d_1 **6.750 – 14.500** in

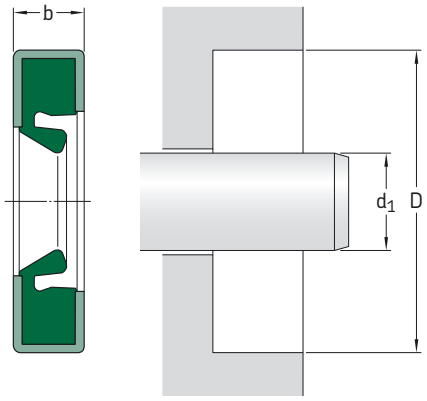

Please see **page 24–25** for housing bore requirements

Dimensions shaft d_1	bore D	nominal seal width b	Design	Lip material	Designation
in/*mm*			–	–	–
6.750 *171,45*	8.000 *203,20*	0.750 *19,05*	HDS7	R	**CR 597627**
8.000 *203,20*	9.500 *241,30*	0.625 *15,88*	HDS7	H	**CR 596567**
8.375 *212,73*	9.750 *247,65*	0.750 *19,05*	HDS7	R	**CR 596198**
8.500 *215,90*	10.000 *254,00*	0.625 *15,88*	HDS7	R	**CR 596415**
9.000 *228,60*	10.498 *266,65*	0.750 *19,05*	HDS7	R	**CR 596200**
	10.500 *266,70*	0.625 *15,88*	HDS7	R	**CR 597535**
9.125 *231,78*	11.125 *282,58*	0.812 *20,63*	HDS7	R	**CR 597472**
9.375 *238,13*	11.500 *292,10*	0.590 *14,99*	HDS7	R	**CR 597408**
9.500 *241,30*	11.000 *279,40*	0.625 *15,88*	HDS7	H	**CR 596566**
9.750 *247,65*	11.000 *279,40*	0.625 *15,88*	HDS7	R	**CR 596561**
10.000 *254,00*	11.250 *285,75*	0.625 *15,88*	HDS7	R	**CR 1000129**
10.500 *266,70*	12.000 *304,80*	0.688 *17,48*	HDS7	H	**CR 1050211**
10.750 *273,05*	11.750 *298,45*	0.591 *15,01*	HDS7	R	**CR 1075020**
	12.750 *323,85*	0.625 *15,88*	HDS7	R	**CR 596171**
	12.750 *323,85*	0.813 *20,65*	HDS7	R	**CR 1075559**
11.000 *279,40*	12.250 *311,15*	0.625 *15,88*	HDS7	R	**CR 1100120**
	13.000 *330,20*	0.813 *20,65*	HDS7	R	**CR 1100519**
11.250 *285,75*	12.750 *323,85*	0.625 *15,88*	HDS7	H	**CR 1125219**
11.500 *292,10*	13.000 *330,20*	0.688 *17,48*	HDS7	R	**CR 1150229**
11.750 *298,45*	13.250 *336,55*	0.688 *17,48*	HDS7	R	**CR 1175219**
12.000 *304,80*	13.500 *342,90*	0.625 *15,88*	HDS7	R	**CR 1213210**
	13.938 *354,03*	0.688 *17,48*	HDS7	R	**CR 1200500**
	14.000 *355,60*	0.812 *20,63*	HDS7	R	**CR 1200521**
12.250 *311,15*	13.750 *349,25*	0.750 *19,05*	HDS7	D	**CR 1225259**
	14.000 *355,60*	0.688 *17,48*	HDS7	R	**CR 1225379**
	14.250 *361,95*	0.750 *19,05*	HDS7	R	**CR 1225549**
	14.250 *361,95*	0.812 *20,62*	HDS7	R	**CR 1225370**
	14.250 *361,95*	1.250 *31,75*	HDS7	R	**CR 1225589**
12.500 *317,50*	14.000 *355,60*	0.688 *17,48*	HDS7	R	**CR 1250239**
12.750 *323,85*	14.250 *361,95*	0.625 *15,88*	HDS7	H	**CR 1275219**
13.000 *330,20*	15.000 *381,00*	1.000 *25,40*	HDS7	R	**CR 1300600**
13.250 *336,55*	15.250 *387,35*	0.750 *19,05*	HDS7	R	**CR 1325569**
13.500 *342,90*	15.500 *393,70*	0.812 *20,63*	HDS7	R	**CR 1350520**
13.750 *349,25*	15.250 *387,35*	0.625 *15,88*	HDS7	H	**CR 1375719**
13.875 *352,43*	16.000 *406,40*	1.000 *25,40*	HDS7	R	**CR 1387610**
14.500 *368,30*	16.000 *406,40*	0.688 *17,48*	HDS7	R	**CR 1450220**

The product table only lists a selection of available sizes. These seals are made to order to fit any size request within the ranges stated in **table 8** on **page 30**

Radial shaft seals – HDS7 – inch dimensions

d_1 **14.750 – 63.250** in

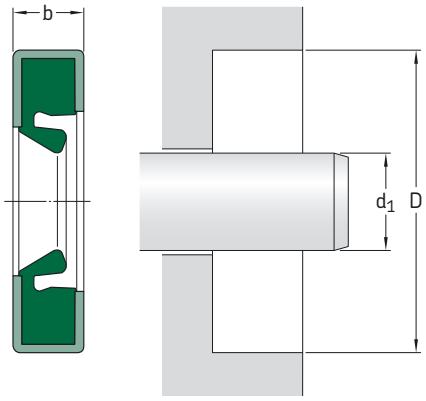

Please see **page 24–25** for housing bore requirements

Dimensions shaft d_1	bore D	nominal seal width b	Design	Lip material	Designation
in/*mm*			–	–	–
14.750	16.500	0.688	HDS7	R	**CR 1475430**
374,65	*419,10*	*17,48*			
15.000	17.000	0.812	HDS7	R	**CR 1500510**
381,00	*431,80*	*20,63*			
15.250	17.250	0.625	HDS7	R	**CR 1525511**
387,35	*438,15*	*15,88*			
15.359	17.709	0.906	HDS7	R	**CR 1536691**
390,12	*449,81*	*23,01*			
15.500	17.500	0.813	HDS7	R	**CR 1550559**
393,70	*444,50*	*20,65*			
15.750	17.250	0.750	HDS7	H	**CR 1575210**
400,05	*438,15*	*19,05*			
15.875	17.500	0.750	HDS7	H	**CR 1587330**
403,23	*444,50*	*19,05*			
16.000	17.500	0.625	HDS7	H	**CR 1600211**
406,40	*444,50*	*15,88*			
	18.000	0.813	HDS7	H	**CR 1600519**
	457,20	*20,65*			
16.250	17.750	0.688	HDS7	R	**CR 1625210**
412,75	*450,85*	*17,48*			
16.500	18.000	0.750	HDS7	R	**CR 1650280**
419,10	*457,20*	*19,05*			
17.000	18.500	0.625	HDS7	R	**CR 1700280**
431,80	*469,90*	*15,88*			
	19.000	0.813	HDS7	R	**CR 1700579**
	482,60	*20,65*			
17.375	18.875	0.750	HDS7	R	**CR 1737219**
441,33	*479,43*	*19,05*			
17.500	19.000	0.688	HDS7	H	**CR 1750220**
444,50	*482,60*	*17,48*			
	19.000	0.688	HDS7	R	**CR 1750221**
	482,60	*17,48*			

Dimensions shaft d_1	bore D	nominal seal width b	Design	Lip material	Designation
in/*mm*			–	–	–
17.875	19.875	0.750	HDS7	R	**CR 1787540**
454,03	*504,83*	*19,05*			
19.000	20.500	0.750	HDS7	R	**CR 1900211**
482,60	*520,70*	*19,05*			
19.250	20.750	0.625	HDS7	R	**CR 596180**
488,95	*527,05*	*15,88*			
19.500	21.500	0.750	HDS7	R	**CR 1950211**
495,30	*546,10*	*19,05*			
20.000	21.500	0.750	HDS7	R	**CR 2000240**
508,00	*546,10*	*19,05*			
20.750	22.750	0.875	HDS7	D	**CR 2075569**
527,05	*577,85*	*22,23*			
21.260	23.228	0.984	HDS7	R	**CR 2126510**
540,00	*590,00*	*25,00*			
21.750	23.750	0.875	HDS7	R	**CR 2175569**
552,45	*603,25*	*22,23*			
22.250	24.250	0.875	HDS7	H	**CR 2225511**
565,15	*615,95*	*22,23*			
24.250	26.000	1.000	HDS7	H	**CR 2425419**
615,95	*660,40*	*25,40*			
25.000	26.500	0.750	HDS7	R	**CR 2500210**
635,00	*673,10*	*19,05*			
26.500	28.000	0.750	HDS7	R	**CR 2650240**
673,10	*711,20*	*19,05*			
27.000	29.000	0.875	HDS7	R	**CR 2700519**
685,80	*736,60*	*22,23*			
27.500	29.500	0.875	HDS7	R	**CR 2750510**
698,50	*749,30*	*22,23*			
27.875	29.815	0.875	HDS7	R	**CR 2788600**
708,03	*757,30*	*22,23*			

The product table only lists a selection of available sizes. These seals are made to order to fit any size request within the ranges stated in **table 8** on **page 30**

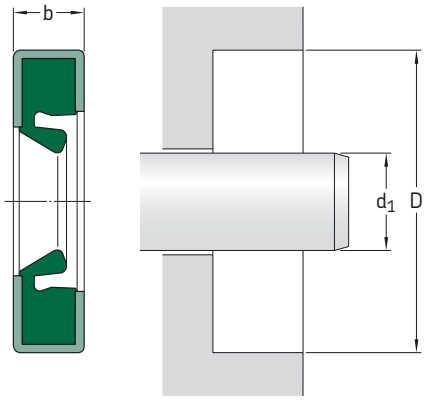

Please see **page 24–25** for housing bore requirements

Dimensions shaft d_1	bore D	nominal seal width b	**Design**	**Lip material**	**Designation**
in/*mm*			–	–	–
28.000 *711,20*	29.500 *749,30*	0.750 *19,05*	HDS7	R	**CR 2800240**
28.000 *711,20*	30.000 *762,00*	0.875 *22,23*	HDS7	R	**CR 2800590**
28.000 *711,20*	30.500 *774,70*	1.000 *25,40*	HDS7	H	**CR 2800650**
28.500 *723,90*	30.500 *774,70*	0.875 *22,23*	HDS7	H	**CR 2850211**
29.000 *736,60*	31.000 *787,40*	0.875 *22,23*	HDS7	R	**CR 2900579**
30.500 *774,70*	32.500 *825,50*	0.875 *22,23*	HDS7	H	**CR 3050511**
30.615 *777,62*	33.268 *845,01*	1.094 *27,79*	HDS7	R	**CR 3061721**
31.496 *800,00*	33.465 *850,01*	0.984 *24,99*	HDS7	R	**CR 3149470**
40.500 *1 028,70*	41.750 *1 060,45*	0.750 *19,05*	HDS7	H	**CR 4050061**
47.000 *1 193,80*	49.000 *1 244,60*	0.875 *22,23*	HDS7	H	**CR 4700511**
57.875 *1 470,03*	60.000 *1 524,00*	0.938 *23,83*	HDS7	R	**CR 5787611**
63.250 *1 606,55*	64.500 *1 638,30*	1.188 *31,75*	HDS7	R	**CR 6325100**

The product table only lists a selection of available sizes. These seals are made to order to fit any size request within the ranges stated in **table 8** on **page 30**

Radial shaft seals – HDS7K – metric dimensions

d_1 **200 – 876,3** mm

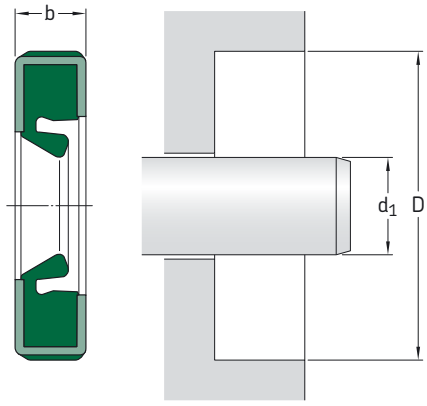

Please see **page 24–25** for housing bore requirements

Dimensions			Design	Lip material	Designation
shaft	bore	nominal seal width			
d_1	D	b			
mm			–	–	–
200	230	15	HDS7K	R	**CR 597728**
215,9	247,65	19,05	HDS7K	R	**CR 597729**
230	260	15	HDS7K	R	**CR 597438**
280	310	15	HDS7K	R	**CR 597566**
	320	18	HDS7K	R	**CR 1102245** *
	320	20	HDS7K	R	**CR 1102280**
310	350	20	HDS7K	R	**CR 1220280**
320	360	25	HDS7K	R	**CR 1259250** **
360	404	20	HDS7K	R	**CR 1417340**
400	450	22	HDS7K	R	**CR 1574508**
	450	18	HDS7K	R	**CR 1574570**
446	496	22	HDS7K	R	**CR 1754540**
450	500	22	HDS7K	R	**CR 1771390**
	500	18	HDS7K	R	**CR 1771578**
485	535	22	HDS7K	R	**CR 1907540**
520	570	18	HDS7K	H	**CR 2047480**
	570	18	HDS7K	H	**CR 2047481** ***
530	580	22	HDS7K	R	**CR 2086460**
	580	20	HDS7K	R	**CR 2086571** *
530	580	22	HDS7K	R	**CR 2086580**
540	590	18	HDS7K	R	**CR 2126508**
560	610	20	HDS7K	R	**CR 2204570** *
570	610	18	HDS7K	H	**CR 2244240**
	610	18	HDS7K	H	**CR 2244241** ****
	620	22	HDS7K	R	**CR 2244470**
760	824	25	HDS7K	R	**CR 2992768**
810	874	25	HDS7K	R	**CR 3189779**
876,3	927,1	22,2	HDS7K	R	**CR 3450510** *****

* 3,18 mm lugs (4)
** 4,77 mm lugs (4)
*** 7,95 mm lugs (6)
**** 1,60 mm lugs (6)
***** 4,77 mm lugs (6)

The product table only lists a selection of available sizes. These seals are made to order to fit any size request within the ranges stated in **table 8** on **page 30**

Radial shaft seals – HDS7K – inch dimensions

d_1 **15.75 – 16.5** mm

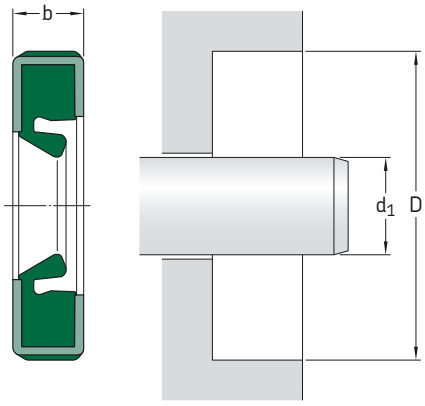

Please see **page 24–25** for housing bore requirements

Dimensions shaft d_1	bore D	nominal seal width b	**Design**	**Lip material**	**Designation**
in/*mm*			–	–	–
15.75 *400,05*	17.25 *438,15*	0.688 *17,48*	HDS7K	R	**CR 1575241**
16 *406,4*	18 *457,2*	0.807 *20,5*	HDS7K	R	**CR 1600562**
16.5 *419,1*	18 *457,2*	0.75 *19,05*	HDS7K	R	**CR 1650248**

The product table only lists a selection of available sizes. These seals are made to order to fit any size request within the ranges stated in **table 8** on **page 30**

Radial shaft seals – HDL – metric dimensions

d_1 **200 – 1 380** mm

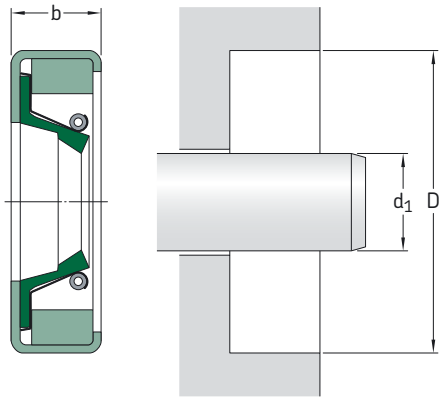

Please see **page 24–25** for housing bore requirements

Dimensions shaft d_1	bore D	nominal seal width b	Lip material	Designation
mm			–	–
200	240	20	R	**CR 200×240×20 HDL R**
			V	**CR 200×240×20 HDL V**
220	250	18	R	**CR 220×250×18 HDL R**
			V	**CR 220×250×18 HDL V**
232	269,87	17,45	R	**CR 232×269.87×17.45 HDL R**
			V	**CR 232×269.87×17.45 HDL V**
240	270	15	R	**CR 240×270×15 HDL R**
			V	**CR 240×270×15 HDL V**
	280	20	R	**CR 240×280×20 HDL R**
			V	**CR 240×280×20 HDL V**
270	308	17,45	R	**CR 270×308×17.45 HDL R**
			V	**CR 270×308×17.45 HDL V**
280	320	19,98	R	**CR 280×320×19.98 HDL R**
			V	**CR 280×320×19.98 HDL V**
	340	20,62	R	**CR 280×340×20.62 HDL R**
			V	**CR 280×340×20.62 HDL V**
330	370	18	R	**CR 330×370×18 HDL R**
			V	**CR 330×370×18 HDL V**
360	404	17,45	R	**CR 360×404×17.45 HDL R**
			V	**CR 360×404×17.45 HDL V**
390	430	16	R	**CR 390×430×16 HDL R**
			V	**CR 390×430×16 HDL V**
400	450	17,45	R	**CR 400×450×17.45 HDL R**
			V	**CR 400×450×17.45 HDL V**
	440	20	R	**CR 400×440×20 HDL R**
			V	**CR 400×440×20 HDL V**
420	460	17,45	R	**CR 420×460×17.45 HDL R**
			V	**CR 420×460×17.45 HDL V**
	470	17,45	R	**CR 420×470×17.45 HDL R**
			V	**CR 420×470×17.45 HDL V**
	460	20	R	**CR 420×460×20 HDL R**
			V	**CR 420×460×20 HDL V**
440	480	20	R	**CR 440×480×20 HDL R**
			V	**CR 440×480×20 HDL V**
470	520	22	R	**CR 470×520×22 HDL R**
			V	**CR 470×520×22 HDL V**

Dimensions shaft d_1	bore D	nominal seal width b	Lip material	Designation
mm			–	–
480	520	20	R	**CR 480×520×20 HDL R**
			V	**CR 480×520×20 HDL V**
485	535	19	R	**CR 485×535×19 HDL R**
			V	**CR 485×535×19 HDL V**
500	550	19	R	**CR 500×550×19 HDL R**
			V	**CR 500×550×19 HDL V**
508	560	25	R	**CR 508×560×25 HDL R**
			V	**CR 508×560×25 HDL V**
513	543	16	R	**CR 513×543×16 HDL R**
			V	**CR 513×543×16 HDL V**
520	560	18	R	**CR 520×560×18 HDL R**
			V	**CR 520×560×18 HDL V**
	570	22	R	**CR 520×570×22 HDL R**
			V	**CR 520×570×22 HDL V**
530	580	20,62	R	**CR 530×580×20.62 HDL R**
			V	**CR 530×580×20.62 HDL V**
540	590	24,98	R	**CR 540×590×24.98 HDL R**
			V	**CR 540×590×24.98 HDL V**
560	610	20	R	**CR 560×610×20 HDL R**
			V	**CR 560×610×20 HDL V**
565	601	20	R	**CR 565×601×20 HDL R**
			V	**CR 565×601×20 HDL V**
600	640	20	R	**CR 600×640×20 HDL R**
			V	**CR 600×640×20 HDL V**
630	670	20	R	**CR 630×670×20 HDL R**
			V	**CR 630×670×20 HDL V**
640	680	20	R	**CR 640×680×20 HDL R**
			V	**CR 640×680×20 HDL V**
650	714	25	R	**CR 650×714×25 HDL R**
			V	**CR 650×714×25 HDL V**
668	706	25,4	R	**CR 668×706×25.4 HDL R**
			V	**CR 668×706×25.4 HDL V**
750	814	25	R	**CR 750×814×25 HDL R**
			V	**CR 750×814×25 HDL V**

Please note that the product table only lists a selection of available sizes. Contact your SKF sales representative for complete information on availability

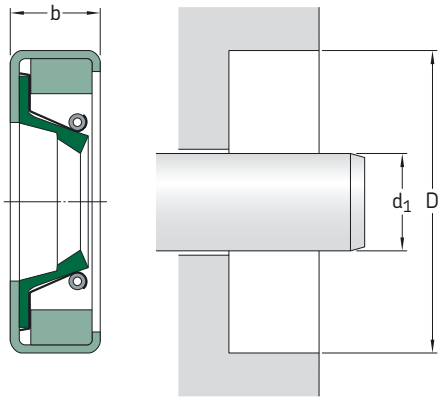

Please see **page 24–25** for housing bore requirements

Dimensions			Lip material	Designation
shaft	bore	nominal seal width		
d_1	D	b		
mm			–	–
760	804	18	R	**CR 760×804×18 HDL R**
			V	**CR 760×804×18 HDL V**
780	844	25	R	**CR 780×844×25 HDL R**
			V	**CR 780×844×25 HDL V**
790	854	25	R	**CR 790×854×25 HDL R**
			V	**CR 790×854×25 HDL V**
837	889	22,22	R	**CR 837×889×22.22 HDL R**
			V	**CR 837×889×22.22 HDL V**
838,1	881	20	R	**CR 838.1×881×20 HDL R**
			V	**CR 838.1×881×20 HDL V**
840	904	25	R	**CR 840×904×25 HDL R**
			V	**CR 840×904×25 HDL V**
920	958,01	19,05	R	**CR 920×958.01×19.05 HDL R**
			V	**CR 920×958.01×19.05 HDL V**
930	980	22,22	R	**CR 930×980×22.22 HDL R**
			V	**CR 930×980×22.22 HDL V**
990	1 040	25	R	**CR 990×1040×25 HDL R**
			V	**CR 990×1040×25 HDL V**
1000	1 050	22,22	R	**CR 1000×1050×22.22 HDL R**
			V	**CR 1000×1050×22.22 HDL V**
1 055	1 100	25	R	**CR 1055×1100×25 HDL R**
			V	**CR 1055×1100×25 HDL V**
1 105	1 160	22	R	**CR 1105×1160×22 HDL R**
			V	**CR 1105×1160×22 HDL V**
1 350	1 414	22	R	**CR 1350×1414×22 HDL R**
			V	**CR 1350×1414×22 HDL V**
1 350	1 415	25	R	**CR 1350×1415×25 HDL R**
			V	**CR 1350×1415×25 HDL V**
1 380	1 440	25	R	**CR 1380×1440×25 HDL R**
			V	**CR 1380×1440×25 HDL V**

Please note that the product table only lists a selection of available sizes. Contact your SKF sales representative for complete information on availability

Radial shaft seals – HDL – inch dimensions

d_1 **6.125 – 14.250** in

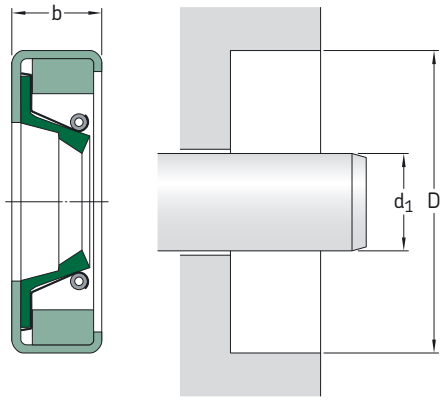

Please see **page 24–25** for housing bore requirements

Dimensions			Designation	
shaft	bore	nominal seal width	lip material	
d_1	D	b	R	V
in/*mm*			–	
6.125 *155,57*	7.625 *193,67*	0.687 *17,45*	**CR HDL 1299 R**	**CR HDL 1299 V**
7.125 *180,97*	8.250 *209,55*	0.750 *19,05*	**CR HDL 3011 R**	**CR HDL 3011 V**
7.875 *200,02*	9.375 *238,12*	0.687 *17,45*	**CR HDL 9176 R**	**CR HDL 9176 V**
8.000 *203,20*	9.500 *241,30*	0.687 *17,45*	**CR HDL 3921 R**	**CR HDL 3921 V**
8.125 *206,37*	10.125 *257,17*	0.687 *17,45*	**CR HDL 9712 R**	**CR HDL 9712 V**
8.250 *209,55*	10.250 *260,35*	0.812 *20,62*	**CR HDL 4499 R**	**CR HDL 4499 V**
8.375 *212,72*	9.875 *250,82*	0.687 *17,45*	**CR HDL 3933 R**	**CR HDL 3933 V**
	10.375 *263,52*	0.812 *20,62*	**CR HDL 4500 R**	**CR HDL 4500 V**
8.500 *215,90*	9.750 *247,65*	0.562 *14,28*	**CR HDL 1705 R**	**CR HDL 1705 V**
	10.000 *254,00*	0.687 *17,45*	**CR HDL 8453 R**	**CR HDL 8453 V**
8.625 *219,07*	10.125 *257,17*	0.687 *17,45*	**CR HDL 3939 R**	**CR HDL 3939 V**
	10.750 *273,05*	0.812 *20,62*	**CR HDL 7718 R**	**CR HDL 7718 V**
8.750 *222,25*	10.250 *260,35*	0.687 *17,45*	**CR HDL 3946 R**	**CR HDL 3946 V**
	10.750 *273,05*	0.812 *20,62*	**CR HDL 3952 R**	**CR HDL 3952 V**
8.875 *225,42*	10.875 *276,22*	0.812 *20,62*	**CR HDL 3953 R**	**CR HDL 3953 V**
9.000 *228,60*	10.500 *266,70*	0.687 *17,45*	**CR HDL 3954 R**	**CR HDL 3954 V**
9.125 *231,77*	10.625 *269,87*	0.687 *17,45*	**CR HDL 3957 R**	**CR HDL 3957 V**
9.250 *234,95*	10.750 *273,05*	0.687 *17,45*	**CR HDL 3963 R**	**CR HDL 3963 V**
9.375 *238,12*	11.375 *288,92*	0.812 *20,62*	**CR HDL 4610 R**	**CR HDL 4610 V**
9.500 *241,30*	10.750 *273,05*	0.562 *14,28*	**CR HDL 3145 R**	**CR HDL 3145 V**
	11.500 *292,10*	0.812 *20,62*	**CR HDL 3984 R**	**CR HDL 3984 V**
9.750 *247,65*	11.125 *282,57*	0.562 *14,28*	**CR HDL 1692 R**	**CR HDL 1692 V**
	11.750 *298,45*	0.687 *17,45*	**CR HDL 9425 R**	**CR HDL 9425 V**
10.000 *254,00*	11.500 *292,10*	0.687 *17,45*	**CR HDL 3992 R**	**CR HDL 3992 V**
	12.000 *304,80*	0.812 *20,62*	**CR HDL 3997 R**	**CR HDL 3997 V**
10.125 *257,17*	11.625 *295,27*	0.687 *17,45*	**CR HDL 3999 R**	**CR HDL 3999 V**
10.250 *260,35*	11.750 *298,45*	0.687 *17,45*	**CR HDL 4004 R**	**CR HDL 4004 V**
10.500 *266,70*	12.000 *304,80*	0.687 *17,45*	**CR HDL 4011 R**	**CR HDL 4011 V**
10.750 *273,05*	12.250 *311,15*	0.687 *17,45*	**CR HDL 4023 R**	**CR HDL 4023 V**
	12.750 *323,85*	0.625 *15,87*	**CR HDL 3014 R**	**CR HDL 3014 V**
10.875 *276,22*	12.375 *314,32*	0.687 *17,45*	**CR HDL 4027 R**	**CR HDL 4027 V**
11.000 *279,40*	12.250 *311,15*	0.562 *14,28*	**CR HDL 3135 R**	**CR HDL 3135 V**
	13.000 *330,20*	0.687 *17,45*	**CR HDL 6034 R**	**CR HDL 6034 V**
11.125 *282,57*	13.000 *330,20*	0.687 *17,45*	**CR HDL 3699 R**	**CR HDL 3699 V**

Please note that the product table only lists a selection of available sizes. Contact your SKF sales representative for complete information on availability

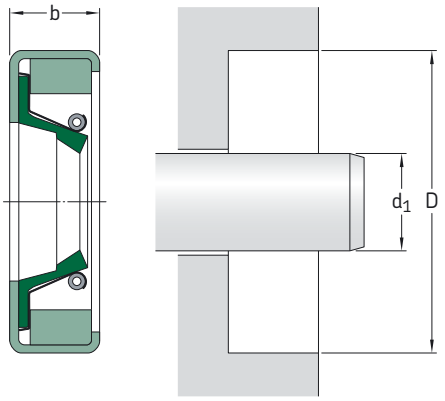

Please see **page 24–25** for housing bore requirements

Dimensions			Designation	
shaft	bore	nominal seal width	lip material	
d_1	D	b	R	V
in/*mm*			–	
11.250	12.750	0.687	**CR HDL 4527 R**	**CR HDL 4527 V**
285,75	*323,85*	*17,45*		
	13.250	0.812	**CR HDL 4047 R**	**CR HDL 4047 V**
	336,55	*20,62*		
11.375	13.375	0.812	**CR HDL 4052 R**	**CR HDL 4052 V**
288,92	*339,72*	*20,62*		
11.500	13.000	0.687	**CR HDL 4057 R**	**CR HDL 4057 V**
292,10	*330,20*	*17,45*		
11.750	13.250	0.687	**CR HDL 4064 R**	**CR HDL 4064 V**
298,45	*336,55*	*17,45*		
12.000	13.500	0.687	**CR HDL 4612 R**	**CR HDL 4612 V**
304,80	*342,90*	*17,45*		
	13.750	0.687	**CR HDL 3701 R**	**CR HDL 3701 V**
	349,25	*17,45*		
12.125	13.875	0.687	**CR HDL 4053 R**	**CR HDL 4053 V**
307,97	*352,42*	*17,45*		
12.250	13.750	0.687	**CR HDL 4613 R**	**CR HDL 4613 V**
311,15	*349,25*	*17,45*		
	14.000	0.687	**CR HDL 4055 R**	**CR HDL 4055 V**
	355,60	*17,45*		
12.375	13.875	0.687	**CR HDL 4076 R**	**CR HDL 4076 V**
314,32	*352,42*	*17,45*		
	14.375	0.687	**CR HDL 4097 R**	**CR HDL 4097 V**
	365,12	*17,45*		
12.500	14.000	0.687	**CR HDL 4079 R**	**CR HDL 4079 V**
317,50	*355,60*	*17,45*		
12.625	14.125	0.687	**CR HDL 4081 R**	**CR HDL 4081 V**
320,67	*358,77*	*17,45*		
12.687	14.750	0.812	**CR HDL 9766 R**	**CR HDL 9766 V**
322,24	*374,65*	*20,62*		
12.750	14.250	0.687	**CR HDL 4089 R**	**CR HDL 4089 V**
323,85	*361,95*	*17,45*		
	15.000	0.812	**CR HDL 4092 R**	**CR HDL 4092 V**
	381,00	*20,62*		
12.875	15.000	0.812	**CR HDL 5404 R**	**CR HDL 5404 V**
327,02	*381,00*	*20,62*		
13.000	14.500	0.687	**CR HDL 4093 R**	**CR HDL 4093 V**
330,20	*368,30*	*17,45*		
13.250	14.750	0.687	**CR HDL 4101 R**	**CR HDL 4101 V**
336,55	*374,65*	*17,45*		
	15.000	0.687	**CR HDL 7169 R**	**CR HDL 7169 V**
	381,00	*17,45*		
13.500	15.000	0.687	**CR HDL 4121 R**	**CR HDL 4121 V**
342,90	*381,00*	*17,45*		
	15.750	0.812	**CR HDL 4123 R**	**CR HDL 4123 V**
	400,05	*20,62*		
13.625	15.500	0.687	**CR HDL 4120 R**	**CR HDL 4120 V**
346,07	*393,70*	*17,45*		
13.750	15.250	0.687	**CR HDL 4529 R**	**CR HDL 4529 V**
349,25	*387,35*	*17,45*		
13.813	16.000	0.812	**CR HDL 4108 R**	**CR HDL 4108 V**
350,85	*406,40*	*20,62*		
13.875	16.000	0.812	**CR HDL 4110 R**	**CR HDL 4110 V**
352,42	*406,40*	*20,62*		
13.937	15.437	0.687	**CR HDL 4130 R**	**CR HDL 4130 V**
353,99	*392,09*	*17,45*		
13.938	15.500	0.687	**CR HDL 4111 R**	**CR HDL 4111 V**
354,02	*393,70*	*17,45*		
14.000	15.500	0.687	**CR HDL 4131 R**	**CR HDL 4131 V**
355,60	*393,70*	*17,45*		
	15.750	0.750	**CR HDL 4134 R**	**CR HDL 4134 V**
	400,05	*19,05*		
14.187	16.732	0.812	**CR HDL 9280 R**	**CR HDL 9280 V**
360,34	*424,99*	*20,62*		
14.250	15.750	0.687	**CR HDL 4118 R**	**CR HDL 4118 V**
361,95	*400,05*	*17,45*		

Please note that the product table only lists a selection of available sizes. Contact your SKF sales representative for complete information on availability

Radial shaft seals – HDL – inch dimensions

d_1 **14.375 – 21.250** in

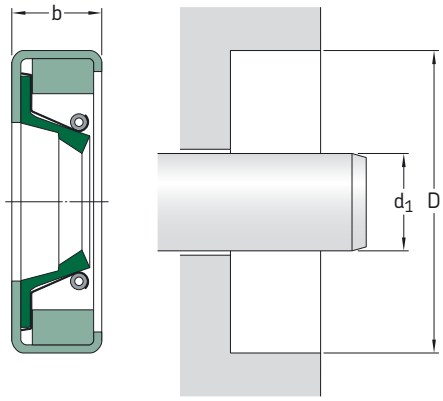

Please see **page 24–25** for housing bore requirements

Dimensions			Designation	
shaft	bore	nominal seal width	lip material	
d_1	D	b	R	V
in/*mm*			–	
14.375 *365,12*	16.000 *406,40*	0.687 *17,45*	**CR HDL 5481 R**	**CR HDL 5481 V**
14.500 *368,30*	16.000 *406,40*	0.687 *17,45*	**CR HDL 4142 R**	**CR HDL 4142 V**
14.625 *371,47*	16.250 *412,75*	0.687 *17,45*	**CR HDL 3856 R**	**CR HDL 3856 V**
14.750 *374,65*	16.250 *412,75*	0.687 *17,45*	**CR HDL 4147 R**	**CR HDL 4147 V**
	16.500 *419,10*	0.687 *17,45*	**CR HDL 5990 R**	**CR HDL 5990 V**
14.875 *377,82*	16.500 *419,10*	0.687 *17,45*	**CR HDL 3858 R**	**CR HDL 3858 V**
	16.875 *428,62*	0.937 *23,79*	**CR HDL 2622 R**	**CR HDL 2622 V**
14.906 *378,61*	17.000 *431,80*	0.812 *20,62*	**CR HDL 3861 R**	**CR HDL 3861 V**
15.000 *381,00*	16.500 *419,10*	0.687 *17,45*	**CR HDL 4151 R**	**CR HDL 4151 V**
15.125 *384,17*	16.750 *425,45*	0.687 *17,45*	**CR HDL 4165 R**	**CR HDL 4165 V**
15.250 *387,35*	16.750 *425,45*	0.687 *17,45*	**CR HDL 4615 R**	**CR HDL 4615 V**
	17.250 *438,15*	0.875 *22,22*	**CR HDL 3030 R**	**CR HDL 3030 V**
15.312 *388,92*	16.875 *428,62*	0.687 *17,45*	**CR HDL 4158 R**	**CR HDL 4158 V**
15.359 *390,11*	17.717 *450,01*	0.687 *17,45*	**CR HDL 4166 R**	**CR HDL 4166 V**
15.375 *390,52*	17.250 *438,15*	0.687 *17,45*	**CR HDL 4167 R**	**CR HDL 4167 V**
15.500 *393,70*	17.496 *444,40*	0.812 *20,62*	**CR HDL 4163 R**	**CR HDL 4163 V**
15.750 *400,05*	17.165 *436,00*	0.687 *17,45*	**CR HDL 9986 R**	**CR HDL 9986 V**
	17.312 *439,72*	0.687 *17,45*	**CR HDL 9271 R**	**CR HDL 9271 V**
15.875 *403,22*	17.875 *454,02*	0.812 *20,62*	**CR HDL 4176 R**	**CR HDL 4176 V**
16.000 *406,40*	17.500 *444,50*	0.687 *17,45*	**CR HDL 4177 R**	**CR HDL 4177 V**
	18.000 *457,20*	0.812 *20,62*	**CR HDL 4180 R**	**CR HDL 4180 V**
16.250 *412,75*	17.750 *450,85*	0.687 *17,45*	**CR HDL 4181 R**	**CR HDL 4181 V**
	18.000 *457,20*	0.750 *19,05*	**CR HDL 4184 R**	**CR HDL 4184 V**
16.375 *415,92*	17.875 *454,02*	0.687 *17,45*	**CR HDL 4179 R**	**CR HDL 4179 V**
16.500 *419,10*	18.000 *457,20*	0.687 *17,45*	**CR HDL 9863 R**	**CR HDL 9863 V**
	18.500 *469,90*	0.812 *20,62*	**CR HDL 4186 R**	**CR HDL 4186 V**
16.535 *419,98*	18.504 *470,00*	0.875 *22,22*	**CR HDL 1929 R**	**CR HDL 1929 V**
16.750 *425,45*	18.250 *463,55*	0.687 *17,45*	**CR HDL 3744 R**	**CR HDL 3744 V**
	19.000 *482,60*	0.812 *20,62*	**CR HDL 3748 R**	**CR HDL 3748 V**
16.937 *430,19*	19.291 *489,99*	0.812 *20,62*	**CR HDL 9695 R**	**CR HDL 9695 V**
17.000 *431,80*	18.500 *469,90*	0.687 *17,45*	**CR HDL 4188 R**	**CR HDL 4188 V**
	19.250 *488,95*	0.812 *20,62*	**CR HDL 4191 R**	**CR HDL 4191 V**
17.250 *438,15*	18.750 *476,25*	0.687 *17,45*	**CR HDL 3751 R**	**CR HDL 3751 V**
17.500 *444,50*	19.000 *482,60*	0.687 *17,45*	**CR HDL 4194 R**	**CR HDL 4194 V**
	19.250 *488,95*	1.000 *25,40*	**CR HDL 3005 R**	**CR HDL 3005 V**
17.625 *447,67*	19.250 *488,95*	0.687 *17,45*	**CR HDL 4199 R**	**CR HDL 4199 V**
	19.625 *498,47*	0.687 *17,45*	**CR HDL 6850 R**	**CR HDL 6850 V**

Please note that the product table only lists a selection of available sizes. Contact your SKF sales representative for complete information on availability

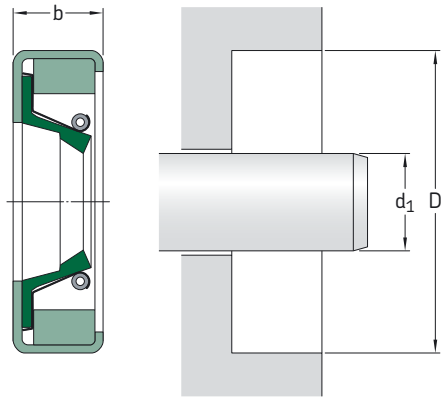

Please see **page 24–25** for housing bore requirements

Dimensions			Designation	
shaft	bore	nominal seal width	lip material	
d_1	D	b	R	V
in/*mm*			–	
17.750	19.750	0.812	**CR HDL 4200 R**	**CR HDL 4200 V**
450,85	*501,65*	*20,62*		
	20.078	0.875	**CR HDL 9084 R**	**CR HDL 9084 V**
	509,98	*22,22*		
17.875	19.875	0.812	**CR HDL 4204 R**	**CR HDL 4204 V**
454,02	*504,82*	*20,62*		
18.000	19.500	0.687	**CR HDL 4206 R**	**CR HDL 4206 V**
457,20	*495,30*	*17,45*		
	19.750	0.687	**CR HDL 5728 R**	**CR HDL 5728 V**
	501,65	*17,45*		
18.120	20.500	0.875	**CR HDL 3754 R**	**CR HDL 3754 V**
460,24	*520,70*	*22,22*		
18.125	20.500	0.875	**CR HDL 3756 R**	**CR HDL 3756 V**
460,37	*520,70*	*22,22*		
18.250	19.750	0.687	**CR HDL 3757 R**	**CR HDL 3757 V**
463,55	*501,65*	*17,45*		
18.375	19.875	0.687	**CR HDL 4213 R**	**CR HDL 4213 V**
466,72	*504,82*	*17,45*		
	19.937	0.687	**CR HDL 7103 R**	**CR HDL 7103 V**
	506,39	*17,45*		
18.500	20.000	0.687	**CR HDL 3768 R**	**CR HDL 3768 V**
469,90	*508,00*	*17,45*		
	20.250	0.687	**CR HDL 3772 R**	**CR HDL 3772 V**
	514,35	*17,45*		
19.000	20.500	0.750	**CR HDL 4218 R**	**CR HDL 4218 V**
482,60	*520,70*	*19,05*		
	21.000	0.875	**CR HDL 4219 R**	**CR HDL 4219 V**
	533,40	*22,22*		
19.250	20.750	0.750	**CR HDL 4617 R**	**CR HDL 4617 V**
488,95	*527,05*	*19,05*		
19.375	21.000	0.750	**CR HDL 3778 R**	**CR HDL 3778 V**
492,12	*533,40*	*19,05*		
19.500	21.000	0.750	**CR HDL 3779 R**	**CR HDL 3779 V**
495,30	*533,40*	*19,05*		
	21.500	0.875	**CR HDL 4221 R**	**CR HDL 4221 V**
	546,10	*22,22*		

Dimensions			Designation	
shaft	bore	nominal seal width	lip material	
d_1	D	b	R	V
in/*mm*			–	
19.750	21.750	0.875	**CR HDL 4228 R**	**CR HDL 4228 V**
501,65	*552,45*	*22,22*		
	22.125	0.875	**CR HDL 7400 R**	**CR HDL 7400 V**
	561,97	*22,22*		
19.875	22.000	0.875	**CR HDL 3788 R**	**CR HDL 3788 V**
504,82	*558,80*	*22,22*		
19.937	21.687	0.625	**CR HDL 4233 R**	**CR HDL 4233 V**
506,39	*550,84*	*15,87*		
19.938	21.500	0.750	**CR HDL 3789 R**	**CR HDL 3789 V**
506,42	*546,10*	*19,05*		
20.000	21.500	0.750	**CR HDL 4235 R**	**CR HDL 4235 V**
508,00	*546,10*	*19,05*		
20.143	22.250	0.875	**CR HDL 3792 R**	**CR HDL 3792 V**
511,63	*565,15*	*22,22*		
20.250	21.750	0.750	**CR HDL 4239 R**	**CR HDL 4239 V**
514,35	*552,45*	*19,05*		
	22.250	0.875	**CR HDL 4240 R**	**CR HDL 4240 V**
	565,15	*22,22*		
20.438	22.500	0.812	**CR HDL 4242 R**	**CR HDL 4242 V**
519,12	*571,50*	*20,62*		
20.500	22.000	0.750	**CR HDL 4619 R**	**CR HDL 4619 V**
520,70	*558,80*	*19,05*		
20.625	22.625	0.812	**CR HDL 9893 R**	**CR HDL 9893 V**
523,87	*574,67*	*20,62*		
20.750	22.750	0.875	**CR HDL 4248 R**	**CR HDL 4248 V**
527,05	*577,85*	*22,22*		
20.875	22.875	0.875	**CR HDL 4250 R**	**CR HDL 4250 V**
530,22	*581,02*	*22,22*		
21.000	22.500	0.750	**CR HDL 5259 R**	**CR HDL 5259 V**
533,40	*571,50*	*19,05*		
	23.000	0.812	**CR HDL 6535 R**	**CR HDL 6535 V**
	584,20	*20,62*		
21.250	23.000	0.750	**CR HDL 4255 R**	**CR HDL 4255 V**
539,75	*584,20*	*19,05*		

Please note that the product table only lists a selection of available sizes. Contact your SKF sales representative for complete information on availability

Radial shaft seals – HDL – inch dimensions

d_1 **21.437 – 31.750** in

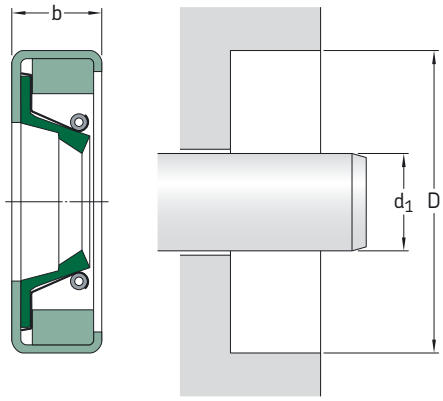

Please see **page 24–25** for housing bore requirements

Dimensions			Designation	
shaft	bore	nominal seal width	lip material	
d_1	D	b	R	V
in/*mm*			–	
21.437	23.187	0.750	**CR HDL 4256 R**	**CR HDL 4256 V**
544,49	*588,94*	*19,05*		
21.500	23.250	0.750	**CR HDL 4257 R**	**CR HDL 4257 V**
546,10	*590,55*	*19,05*		
	23.500	0.875	**CR HDL 4259 R**	**CR HDL 4259 V**
	596,90	*22,22*		
21.625	23.375	0.750	**CR HDL 4261 R**	**CR HDL 4261 V**
549,27	*593,72*	*19,05*		
21.750	23.250	0.750	**CR HDL 4621 R**	**CR HDL 4621 V**
552,45	*590,55*	*19,05*		
	24.750	0.875	**CR HDL 4262 R**	**CR HDL 4262 V**
	628,65	*22,22*		
22.000	23.500	0.750	**CR HDL 4269 R**	**CR HDL 4269 V**
558,80	*596,90*	*19,05*		
	24.250	0.812	**CR HDL 9082 R**	**CR HDL 9082 V**
	615,95	*20,62*		
22.250	24.250	0.875	**CR HDL 3764 R**	**CR HDL 3764 V**
565,15	*615,95*	*22,22*		
22.375	24.250	0.750	**CR HDL 4268 R**	**CR HDL 4268 V**
568,32	*615,95*	*19,05*		
	24.375	0.875	**CR HDL 2576 R**	**CR HDL 2576 V**
	619,12	*22,22*		
22.437	24.000	0.750	**CR HDL 4275 R**	**CR HDL 4275 V**
569,89	*609,60*	*19,05*		
22.500	24.000	0.750	**CR HDL 4271 R**	**CR HDL 4271 V**
571,50	*609,60*	*19,05*		
	24.500	0.875	**CR HDL 4279 R**	**CR HDL 4279 V**
	622,30	*22,22*		
	24.750	0.875	**CR HDL 4273 R**	**CR HDL 4273 V**
	628,65	*22,22*		
22.750	24.750	0.875	**CR HDL 4281 R**	**CR HDL 4281 V**
577,85	*628,65*	*22,22*		
23.000	24.500	0.750	**CR HDL 4283 R**	**CR HDL 4283 V**
584,20	*622,30*	*19,05*		
	24.750	0.750	**CR HDL 5421 R**	**CR HDL 5421 V**
	628,65	*19,05*		

Dimensions			Designation	
shaft	bore	nominal seal width	lip material	
d_1	D	b	R	V
in/*mm*			–	
23.250	25.000	0.750	**CR HDL 4286 R**	**CR HDL 4286 V**
590,55	*635,00*	*19,05*		
	25.250	0.750	**CR HDL 9371 R**	**CR HDL 9371 V**
	641,35	*19,05*		
23.375	25.375	0.875	**CR HDL 4287 R**	**CR HDL 4287 V**
593,72	*644,52*	*22,22*		
23.500	24.681	0.591	**CR HDL 3033 R**	**CR HDL 3033 V**
596,90	*626,90*	*15,00*		
23.562	25.250	0.750	**CR HDL 4290 R**	**CR HDL 4290 V**
598,47	*641,35*	*19,05*		
	25.375	0.750	**CR HDL 4291 R**	**CR HDL 4291 V**
	644,52	*19,05*		
23.625	26.000	0.875	**CR HDL 4292 R**	**CR HDL 4292 V**
600,07	*660,40*	*22,22*		
23.750	25.250	1.000	**CR HDL 6239 R**	**CR HDL 6239 V**
603,25	*641,35*	*25,40*		
23.875	26.000	0.875	**CR HDL 4293 R**	**CR HDL 4293 V**
606,42	*660,40*	*22,22*		
24.000	25.500	0.750	**CR HDL 4623 R**	**CR HDL 4623 V**
609,60	*647,70*	*19,05*		
	26.000	0.812	**CR HDL 4295 R**	**CR HDL 4295 V**
	660,40	*20,62*		
24.250	26.250	0.875	**CR HDL 4301 R**	**CR HDL 4301 V**
615,95	*666,75*	*22,22*		
24.437	26.000	0.750	**CR HDL 4302 R**	**CR HDL 4302 V**
620,69	*660,40*	*19,05*		
	26.935	1.000	**CR HDL 9990 R**	**CR HDL 9990 V**
	684,15	*25,40*		
24.500	26.500	0.875	**CR HDL 4305 R**	**CR HDL 4305 V**
622,30	*673,10*	*22,22*		
25.000	26.500	0.750	**CR HDL 4308 R**	**CR HDL 4308 V**
635,00	*673,10*	*19,05*		
25.187	26.875	0.750	**CR HDL 4311 R**	**CR HDL 4311 V**
639,74	*682,62*	*19,05*		

Please note that the product table only lists a selection of available sizes. Contact your SKF sales representative for complete information on availability

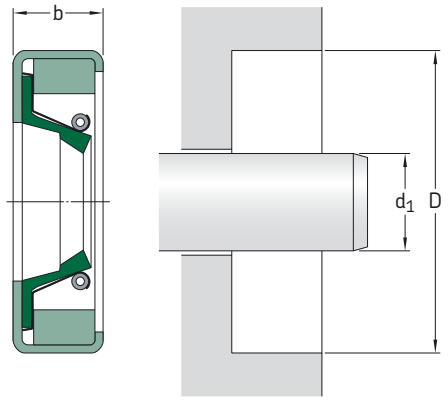

Please see **page 24–25** for housing bore requirements

Dimensions			Designation	
shaft	bore	nominal seal width	lip material	
d_1	D	b	R	V
in/*mm*			–	
25.250	27.250	0.750	**CR HDL 4299 R**	**CR HDL 4299 V**
641,35	*692,15*	*19,05*		
25.500	26.750	0.750	**CR HDL 3022 R**	**CR HDL 3022 V**
647,70	*679,45*	*19,05*		
	27.500	0.875	**CR HDL 4318 R**	**CR HDL 4318 V**
	698,50	*22,22*		
25.750	27.500	0.750	**CR HDL 6998 R**	**CR HDL 6998 V**
654,05	*698,50*	*19,05*		
25.875	28.000	0.875	**CR HDL 4303 R**	**CR HDL 4303 V**
657,22	*711,20*	*22,22*		
25.988	27.625	0.750	**CR HDL 4306 R**	**CR HDL 4306 V**
660,09	*701,67*	*19,05*		
26.000	27.625	0.750	**CR HDL 5921 R**	**CR HDL 5921 V**
660,40	*701,67*	*19,05*		
26.125	27.625	0.750	**CR HDL 4329 R**	**CR HDL 4329 V**
663,57	*701,67*	*19,05*		
26.375	28.188	0.875	**CR HDL 4307 R**	**CR HDL 4307 V**
669,92	*715,97*	*22,22*		
26.500	28.000	0.750	**CR HDL 4533 R**	**CR HDL 4533 V**
673,10	*711,20*	*19,05*		
27.000	29.000	0.875	**CR HDL 4333 R**	**CR HDL 4333 V**
685,80	*736,60*	*22,22*		
27.250	29.250	0.875	**CR HDL 4626 R**	**CR HDL 4626 V**
692,15	*742,95*	*22,22*		
27.500	29.000	0.750	**CR HDL 4315 R**	**CR HDL 4315 V**
698,50	*736,60*	*19,05*		
27.625	29.625	0.750	**CR HDL 5001 R**	**CR HDL 5001 V**
701,67	*752,47*	*19,05*		
27.875	29.812	0.875	**CR HDL 4341 R**	**CR HDL 4341 V**
708,02	*757,22*	*22,22*		
28.000	29.500	0.750	**CR HDL 4343 R**	**CR HDL 4343 V**
711,20	*749,30*	*19,05*		
	29.813	0.750	**CR HDL 4316 R**	**CR HDL 4316 V**
	757,25	*19,05*		

Dimensions			Designation	
shaft	bore	nominal seal width	lip material	
d_1	D	b	R	V
in/*mm*			–	
28.438	31.000	0.875	**CR HDL 4321 R**	**CR HDL 4321 V**
722,32	*787,40*	*22,22*		
28.500	30.500	0.875	**CR HDL 4346 R**	**CR HDL 4346 V**
723,90	*774,70*	*22,22*		
28.750	30.750	0.875	**CR HDL 4628 R**	**CR HDL 4628 V**
730,25	*781,05*	*22,22*		
29.000	30.500	0.750	**CR HDL 4347 R**	**CR HDL 4347 V**
736,60	*774,70*	*19,05*		
	31.500	1.000	**CR HDL 8793 R**	**CR HDL 8793 V**
	800,10	*25,40*		
29.500	31.500	0.875	**CR HDL 4352 R**	**CR HDL 4352 V**
749,30	*800,10*	*22,22*		
	32.000	0.875	**CR HDL 4538 R**	**CR HDL 4538 V**
	812,80	*22,22*		
30.000	31.500	0.750	**CR HDL 4356 R**	**CR HDL 4356 V**
762,00	*800,10*	*19,05*		
	31.625	0.750	**CR HDL 7870 R**	**CR HDL 7870 V**
	803,27	*19,05*		
	32.500	0.875	**CR HDL 4358 R**	**CR HDL 4358 V**
	825,50	*22,22*		
	32.750	0.875	**CR HDL 4359 R**	**CR HDL 4359 V**
	831,85	*22,22*		
30.250	32.500	0.875	**CR HDL 4906 R**	**CR HDL 4906 V**
768,35	*825,50*	*22,22*		
30.312	32.375	0.875	**CR HDL 4361 R**	**CR HDL 4361 V**
769,92	*822,32*	*22,22*		
30.500	32.500	0.875	**CR HDL 4365 R**	**CR HDL 4365 V**
774,70	*825,50*	*22,22*		
31.000	32.500	0.750	**CR HDL 5739 R**	**CR HDL 5739 V**
787,40	*825,50*	*19,05*		
	33.500	0.875	**CR HDL 4540 R**	**CR HDL 4540 V**
	850,90	*22,22*		
31.250	32.750	0.750	**CR HDL 4631 R**	**CR HDL 4631 V**
793,75	*831,85*	*19,05*		
31.750	33.750	0.875	**CR HDL 5016 R**	**CR HDL 5016 V**
806,45	*857,25*	*22,22*		

Please note that the product table only lists a selection of available sizes. Contact your SKF sales representative for complete information on availability

Radial shaft seals – HDL – inch dimensions

d_1 **32.000 – 51.250** in

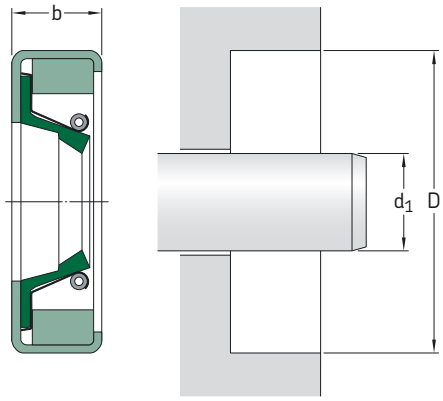

Please see **page 24–25** for housing bore requirements

Dimensions			Designation	
shaft	bore	nominal seal width	lip material	
d_1	D	b	R	V
in/*mm*			–	
32.000	33.500	0.750	**CR HDL 3023 R**	**CR HDL 3023 V**
812,80	*850,90*	*19,05*		
32.125	34.125	0.875	**CR HDL 4371 R**	**CR HDL 4371 V**
815,97	*866,77*	*22,22*		
	34.125	0.750	**CR HDL 3002 R**	**CR HDL 3002 V**
	866,77	*19,05*		
32.312	34.500	0.875	**CR HDL 4373 R**	**CR HDL 4373 V**
820,72	*876,30*	*22,22*		
32.500	34.500	0.875	**CR HDL 4377 R**	**CR HDL 4377 V**
825,50	*876,30*	*22,22*		
32.750	34.250	0.750	**CR HDL 4542 R**	**CR HDL 4542 V**
831,85	*869,95*	*19,05*		
33.000	34.500	0.750	**CR HDL 4381 R**	**CR HDL 4381 V**
838,20	*876,30*	*19,05*		
33.000	34.650	0.787	**CR HDL 4634 R**	**CR HDL 4634 V**
838,20	*880,10*	*20,00*		
	35.000	0.875	**CR HDL 4382 R**	**CR HDL 4382 V**
	889,00	*22,22*		
33.500	35.000	0.875	**CR HDL 9504 R**	**CR HDL 9504 V**
850,90	*889,00*	*22,22*		
	35.625	0.875	**CR HDL 4548 R**	**CR HDL 4548 V**
	904,87	*22,22*		
33.625	35.625	0.875	**CR HDL 4328 R**	**CR HDL 4328 V**
854,07	*904,87*	*22,22*		
34.000	35.625	0.875	**CR HDL 4331 R**	**CR HDL 4331 V**
863,60	*904,87*	*22,22*		
34.250	36.000	0.750	**CR HDL 3017 R**	**CR HDL 3017 V**
869,95	*914,40*	*19,05*		
	36.750	0.875	**CR HDL 4335 R**	**CR HDL 4335 V**
	933,45	*22,22*		
34.500	36.000	0.750	**CR HDL 6908 R**	**CR HDL 6908 V**
876,30	*914,40*	*19,05*		
	36.500	1.000	**CR HDL 3021 R**	**CR HDL 3021 V**
	927,10	*25,40*		
34.750	36.750	0.875	**CR HDL 3831 R**	**CR HDL 3831 V**
882,65	*933,45*	*22,22*		
35.000	37.000	0.875	**CR HDL 3835 R**	**CR HDL 3835 V**
889,00	*939,80*	*22,22*		
35.250	37.250	0.875	**CR HDL 4416 R**	**CR HDL 4416 V**
895,35	*946,15*	*22,22*		
35.375	37.375	0.875	**CR HDL 4417 R**	**CR HDL 4417 V**
898,52	*949,32*	*22,22*		
35.437	38.583	0.875	**CR HDL 9079 R**	**CR HDL 9079 V**
900,09	*980,00*	*22,22*		
35.496	37.996	0.984	**CR HDL 3001 R**	**CR HDL 3001 V**
901,60	*965,10*	*25,00*		
35.500	37.500	0.875	**CR HDL 4553 R**	**CR HDL 4553 V**
901,70	*952,50*	*22,22*		
35.827	38.077	0.687	**CR HDL 3003 R**	**CR HDL 3003 V**
910,00	*967,15*	*17,45*		
36.000	38.000	0.875	**CR HDL 4421 R**	**CR HDL 4421 V**
914,40	*965,20*	*22,22*		
36.500	38.000	0.750	**CR HDL 4429 R**	**CR HDL 4429 V**
927,10	*965,20*	*19,05*		
36.750	38.750	0.875	**CR HDL 4432 R**	**CR HDL 4432 V**
933,45	*984,25*	*22,22*		
37.000	39.000	0.875	**CR HDL 4434 R**	**CR HDL 4434 V**
939,80	*990,60*	*22,22*		
37.250	39.250	0.875	**CR HDL 4436 R**	**CR HDL 4436 V**
946,15	*996,95*	*22,22*		
37.374	39.500	0.875	**CR HDL 4425 R**	**CR HDL 4425 V**
949,30	*1 003,30*	*22,22*		
37.437	39.500	0.875	**CR HDL 3847 R**	**CR HDL 3847 V**
950,89	*1 003,30*	*22,22*		

Please note that the product table only lists a selection of available sizes. Contact your SKF sales representative for complete information on availability

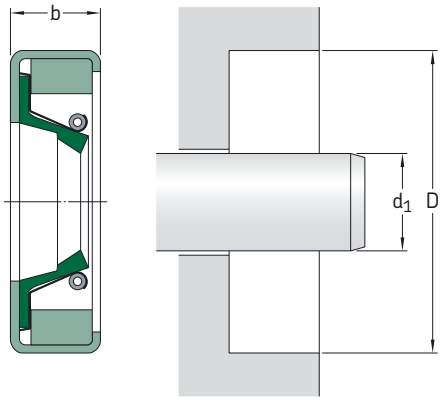

Please see **page 24–25** for housing bore requirements

Dimensions			Designation	
shaft	bore	nominal seal width	lip material	
d_1	D	b	R	V
in/*mm*			–	
37.500	39.000	0.750	**CR HDL 9411 R**	**CR HDL 9411 V**
952,50	*990,60*	*19,05*		
38.000	39.500	0.750	**CR HDL 3004 R**	**CR HDL 3004 V**
965,20	*1 003,30*	*19,05*		
	41.000	0.875	**CR HDL 4340 R**	**CR HDL 4340 V**
	1 041,40	*22,22*		
38.250	40.250	0.875	**CR HDL 4454 R**	**CR HDL 4454 V**
971,55	*1 022,35*	*22,22*		
38.258	40.750	0.875	**CR HDL 4342 R**	**CR HDL 4342 V**
971,75	*1 035,05*	*22,22*		
38.500	41.000	0.875	**CR HDL 4349 R**	**CR HDL 4349 V**
977,90	*1 041,40*	*22,22*		
38.750	40.750	0.875	**CR HDL 4456 R**	**CR HDL 4456 V**
984,25	*1 035,05*	*22,22*		
38.937	41.000	0.875	**CR HDL 4462 R**	**CR HDL 4462 V**
988,99	*1 041,40*	*22,22*		
39.000	41.000	0.875	**CR HDL 4465 R**	**CR HDL 4465 V**
990,60	*1 041,40*	*22,22*		
	42.250	0.875	**CR HDL 4577 R**	**CR HDL 4577 V**
	1 073,15	*22,22*		
39.750	42.250	0.875	**CR HDL 7538 R**	**CR HDL 7538 V**
1 009,65	*1 073,15*	*22,22*		
40.000	42.000	0.875	**CR HDL 4467 R**	**CR HDL 4467 V**
1 016,00	*1 066,80*	*22,22*		
40.500	42.500	0.875	**CR HDL 4468 R**	**CR HDL 4468 V**
1 028,70	*1 079,50*	*22,22*		
	43.020	0.875	**CR HDL 1964 R**	**CR HDL 1964 V**
	1 092,70	*22,22*		
41.500	43.500	0.875	**CR HDL 4635 R**	**CR HDL 4635 V**
1 054,10	*1 104,90*	*22,22*		
41.875	43.500	1.000	**CR HDL 8628 R**	**CR HDL 8628 V**
1 063,62	*1 104,90*	*25,40*		
42.248	44.248	1.000	**CR HDL 4470 R**	**CR HDL 4470 V**
1 073,10	*1 123,90*	*25,40*		
42.500	44.250	0.875	**CR HDL 5555 R**	**CR HDL 5555 V**
1 079,50	*1 123,95*	*22,22*		
43.000	45.500	0.875	**CR HDL 7189 R**	**CR HDL 7189 V**
1 092,20	*1 155,70*	*22,22*		
43.500	45.500	0.875	**CR HDL 4637 R**	**CR HDL 4637 V**
1 104,90	*1 155,70*	*22,22*		
43.750	45.750	0.875	**CR HDL 4638 R**	**CR HDL 4638 V**
1 111,25	*1 162,05*	*22,22*		
44.000	46.000	0.875	**CR HDL 7087 R**	**CR HDL 7087 V**
1 117,60	*1 168,40*	*22,22*		
44.500	46.000	0.750	**CR HDL 4563 R**	**CR HDL 4563 V**
1 130,30	*1 168,40*	*19,05*		
46.004	47.500	0.750	**CR HDL 3006 R**	**CR HDL 3006 V**
1 168,50	*1 206,50*	*19,05*		
46.500	48.500	0.875	**CR HDL 4578 R**	**CR HDL 4578 V**
1 181,10	*1 231,90*	*22,22*		
46.850	48.819	0.875	**CR HDL 8317 R**	**CR HDL 8317 V**
1 189,99	*1 240,00*	*22,22*		
48.000	50.000	0.875	**CR HDL 8579 R**	**CR HDL 8579 V**
1 219,20	*1 270,00*	*22,22*		
48.250	50.250	0.875	**CR HDL 4639 R**	**CR HDL 4639 V**
1 225,55	*1 276,35*	*22,22*		
51.248	53.289	0.875	**CR HDL 6747 R**	**CR HDL 6747 V**
1 301,71	*1 353,55*	*22,22*		
51.250	53.300	0.875	**CR HDL 1914 R**	**CR HDL 1914 V**
1 301,75	*1 353,82*	*22,22*		

Please note that the product table only lists a selection of available sizes. Contact your SKF sales representative for complete information on availability

Radial shaft seals – HDS1, HDS2, HDS3 – metric dimensions

d_1 **170 – 650** mm

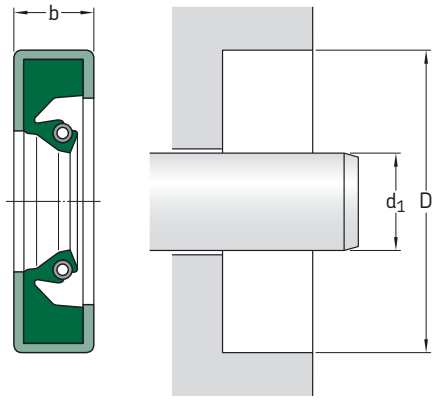

Please see **page 24–25** for housing bore requirements

Dimensions shaft d_1	bore D	nominal seal width b	Design	Lip material	Lug[1]	Designation
mm			–	–	–	–
170	210	16	HDS1	R		**CR 595932**
200	230	15,87	HDS1	R		**CR 595139**
	238	19	HDS1	V		**CR 78708**
	240	20	HDS2	R		**CR 595408**
210	245	16	HDS1	R		**CR 593438**
	250	20	HDS1	V		**CR 82615**
215	270	23	HDS2	R		**CR 595196**
220	255	16	HDS1	R	4	**CR 595999**
	260	16	HDS1	R		**CR 592515**
	260	20	HDS1	R		**CR 594271**
225	257	16	HDS1	R		**CR 595249**
230	270	16	HDS2	V		**CR 596548**
235	270	16	HDS2	R		**CR 595058**
240	280	16	HDS2	R		**CR 94498**
	280	16	HDS2	D		**CR 594897**
245	305	28	HDS2	R		**CR 595414**
250	280	16	HDS2	R		**CR 595763**
	280	16	HDS1	D		**CR 591941**
	285	16	HDS2	D		**CR 595122**
	310	25	HDS1	R		**CR 595203**
260	290	16	HDS2	D		**CR 1024081**
	290	16	HDS2	V		**CR 1023453**
	300	16	HDS2	R		**CR 1024232**
	300	20	HDS2	D		**CR 1024218**
265	310	16	HDS1	R		**CR 1043360**
270	310	16	HDS3	V	6	**CR 1063318**
	310	20	HDS2	V		**CR 1063248**
	330	25	HDS2	V		**CR 1063744**
275	310	16	HDS1	R		**CR 1082160**
280	310	16	HDS1	R		**CR 1102080**
	320	16	HDS1	R		**CR 1102220**
	320	20	HDS1	R		**CR 1102250**
	340	25	HDS1	R		**CR 1102720**

Dimensions shaft d_1	bore D	nominal seal width b	Design	Lip material	Lug[1]	Designation
mm			–	–	–	–
285	320	16	HDS2	R		**CR 1122162**
	325	16	HDS1	R		**CR 1122230**
290	330	18	HDS2	R		**CR 1142242**
	350	25	HDS2	R		**CR 1142732**
295	335	18	HDS1	R		**CR 1161300**
300	332	16	HDS2	R		**CR 1181052**
	335	18	HDS2	R		**CR 1181182**
	340	18	HDS1	V		**CR 1181307**
	340	18	HDS1	D		**CR 1181220**
	340	20	HDS1	V		**CR 1181230**
	345	22	HDS1	R		**CR 1181410**
	360	25	HDS2	V		**CR 1181704**
310	350	18	HDS2	V		**CR 1220224**
	350	20	HDS2	D		**CR 1220228**
	370	25	HDS2	D		**CR 1220722**
315	355	18	HDS1	V		**CR 1240240**
318	360	20	HDS2	R		**CR 1252340**
320	350	18	HDS1	R		**CR 592869**
	360	18	HDS1	R		**CR 1259370**
	360	18	HDS2	V		**CR 1259247**
	380	25	HDS1	R		**CR 1260690**
330	370	18	HDS1	R		**CR 1299300**
	390	25	HDS1	R		**CR 1299700**
335	375	18	HDS3	D	6	**CR 1318303**
340	380	18	HDS2	V		**CR 1339214**
	380	18	HDS2	D		**CR 1338243**
	380	20	HDS2	H		**CR 1339251**
	380	20	HDS2	R		**CR 1339252**
350	380	16	HDS2	R		**CR 1377050**
	390	18	HDS2	D		**CR 1377242**
360	400	18	HDS1	R		**CR 1417250**
	400	20	HDS1	V		**CR 1417251**
	410	17	HDS1	R		**CR 1457230**
365	405	18	HDS2	R		**CR 1437242**

[1] Number of 12,7 mm adjustable spacer lugs

Please note that the product table only lists a selection of available sizes. These seals are made to order to fit any size request within the ranges stated in **table 8** on **page 30**

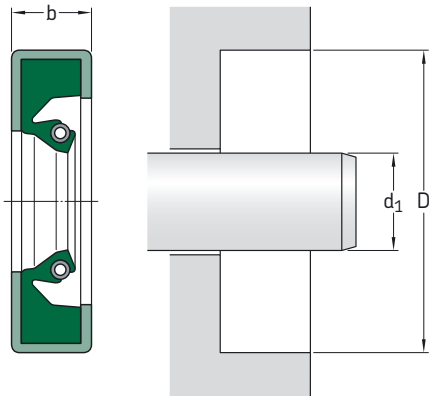

Please see **page 24–25** for housing bore requirements

Dimensions shaft d_1	bore D	nominal seal width b	Design	Lip material	Lug[1]	Designation
mm			–	–	–	–
370	410	16	HDS2	R		**CR 1456232**
375	420	18	HDS2	R		**CR 1476432**
380	420	20	HDS2	R		**CR 1496252**
	420	20	HDS2	V		**CR 1496256**
	440	25	HDS2	R		**CR 1496672**
390	430	16	HDS2	R		**CR 1535304**
395	430	18	HDS2	R	6	**CR 1555185**
400	440	20	HDS1	R		**CR 1575280**
	440	20	HDS2	R		**CR 1575212**
	460	25	HDS1	R		**CR 1575720**
410	450	20	HDS2	R		**CR 1614242**
	460	22	HDS2	R		**CR 1614572**
420	460	20	HDS2	R		**CR 1653262**
	470	22	HDS1	R	4	**CR 1653570**
430	480	22	HDS1	V		**CR 1692567**
	480	25	HDS2	R		**CR 1693502**
435	485	18	HDS2	R	6	**CR 1712562**
440	470	20	HDS1	R		**CR 1732130**
	480	20	HDS1	R		**CR 1732250**
445	485	20	HDS1	R		**CR 1752270**
450	490	20	HDS1	R		**CR 1771250**
448	480	16	HDS2	R		**CR 1763110**
460	500	20	HDS1	R		**CR 1811280**
	500	20	HDS1	V		**CR 1811287**
	510	22	HDS2	V		**CR 1811564**
	520	25	HDS2	R		**CR 1811722**
470	510	20	HDS1	R		**CR 1850280**
	530	26	HDS2	R		**CR 1850702**
480	520	20	HDS1	R		**CR 1890260**
485	535	22	HDS1	R		**CR 1909500**

Dimensions shaft d_1	bore D	nominal seal width b	Design	Lip material	Lug[1]	Designation
mm			–	–	–	–
490	530	20	HDS1	R		**CR 1929250**
500	540	20	HDS1	R		**CR 1968190**
	550	18	HDS1	R	6	**CR 1968570**
505	555	20,62	HDS2	R		**CR 1988462**
510	554	20	HDS1	D		**CR 2007340**
515	555	20	HDS2	R		**CR 2027282**
520	560	20	HDS1	R		**CR 2047220**
525	575	20	HDS3	D	4	**CR 2066573**
530	580	20	HDS1	V		**CR 2087547**
	580	22	HDS1	R		**CR 2086540**
535	580	20	HDS3	D	6	**CR 2105443**
540	590	20	HDS2	V		**CR 2126504**
545	595	22	HDS1	R		**CR 2145500**
550	590	20	HDS1	R		**CR 2165250**
560	610	20	HDS1	V		**CR 2204473**
570	620	22	HDS2	R	6	**CR 2244552**
580	620	20	HDS3	D	6	**CR 2283228**
585	620	20	HDS2	R		**CR 2303192**
590	630	20	HDS1	R		**CR 2322250**
600	640	20	HDS1	R		**CR 2362250**
	650	22	HDS2	R		**CR 2362502**
	650	25	HDS1	V		**CR 2362460**
610	660	20	HDS2	R		**CR 2407542**
630	670	20	HDS3	D	4	**CR 2480283**
640	690	25	HDS1	R		**CR 2519490**
650	700	22	HDS2	V		**CR 2559504**
	710	25	HDS2	R		**CR 2559702**

[1] Number of 12,7 mm adjustable spacer lugs

Please note that the product table only lists a selection of available sizes. These seals are made to order to fit any size request within the ranges stated in **table 8** on **page 30**

Radial shaft seals – HDS1, HDS2, HDS3 – metric dimensions

d_1 **660 – 1 550** mm

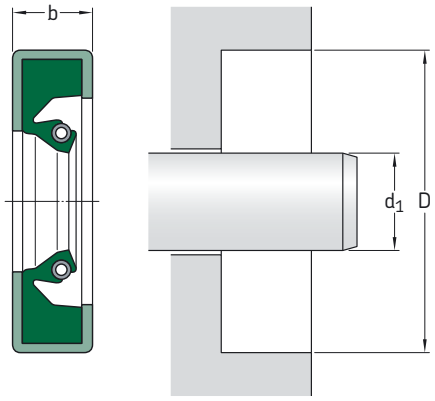

Please see **page 24–25** for housing bore requirements

Dimensions			Design	Lip material	Lug[1]	Designation
shaft	bore	nominal seal width				
d_1	D	b				
mm			–	–	–	–
660	700	18	HDS1	R		**CR 2598240**
670	714	20	HDS3	D	6	**CR 2637413**
680	730	20	HDS2	R		**CR 2677542**
685	720	20	HDS2	R		**CR 2696192**
690	730	20	HDS2	R		**CR 2716230**
695	770	30	HDS1	R		**CR 2736840**
700	740	20	HDS1	R		**CR 2755250**
710	760	20	HDS1	V		**CR 2795507**
720	770	25	HDS2	R		**CR 2834500**
740	780	16,50	HDS1	R		**CR 2913220**
750	780	18	HDS1	R		**CR 2953100**
	790	23	HDS1	V		**CR 2952287**
	800	25	HDS2	R		**CR 2952502**
	814	25	HDS1	R	6	**CR 2953740**
760	800	20	HDS1	V		**CR 2992283**
	810	25	HDS1	R		**CR 2992500**
770	810	20	HDS1	V		**CR 3031280**
	845	27,79	HDS1	R		**CR 3032840**
780	820	19,05	HDS2	R		**CR 3070252**
790	850	25	HDS1	V		**CR 3110780**
800	840	20	HDS1	R		**CR 3149250**
810	860	25	HDS2	R		**CR 3189502**
825	860	20	HDS2	R		**CR 3248192**
850	914	25	HDS1	R		**CR 3346730**
860	920	25	HDS1	R		**CR 3385700**
880	940	25	HDS2	R	6	**CR 3464705**
	944	25	HDS3	D	6	**CR 3464783**

Dimensions			Design	Lip material	Lug[1]	Designation
shaft	bore	nominal seal width				
d_1	D	b				
mm			–	–	–	–
893	925	20	HDS2	H		**CR 3515138**
900	960	25	HDS1	R	6	**CR 3543710**
910	974	22	HDS1	R	6	**CR 3582770**
920	984	25	HDS2	V		**CR 3622784**
927	978	22	HDS2	D		**CR 3649572**
939	971	15,88	HDS3	H	6	**CR 3716478**
940	1 000	25	HDS1	R	4	**CR 3700728**
950	1 006	20	HDS2	R		**CR 3740652**
960	1 020	25	HDS2	H		**CR 3780729**
	1 040	23	HDS2	V		**CR 3780908**
990	1 045	25	HDS1	R		**CR 3898631**
1 000	1 035	20	HDS2	R		**CR 3937172**
1 020	1 084	25	HDS1	R		**CR 4016790**
1 055	1 100	25	HDS2	D		**CR 4154428**
1 105	1 160	25	HDS1	R		**CR 4350700**
1 120	1 184	25	HDS2	R	6	**CR 4409592**
1 140	1 180	20	HDS1	V		**CR 4488287**
1 220	1 255	20	HDS2	R		**CR 4803182**
1 250	1 314	25	HDS2	R		**CR 4921793**
1 260	1 300	18	HDS1	R		**CR 593764**
1 370	1 420	19,05	HDS2	H		**CR 5393512**
	1 420	20	HDS1	R		**CR 5393510**
1 530	1 580	20	HDS1	R		**CR 6023510**
1 550	1 610	25	HDS2	V		**CR 6102702**

[1] Number of 12,7 mm adjustable spacer lugs

Please note that the product table only lists a selection of available sizes. These seals are made to order to fit any size request within the ranges stated in **table 8** on **page 30**

Radial shaft seals – HDS1, HDS2, HDS3 – inch dimensions

d_1 **6.000 – 9.500** in

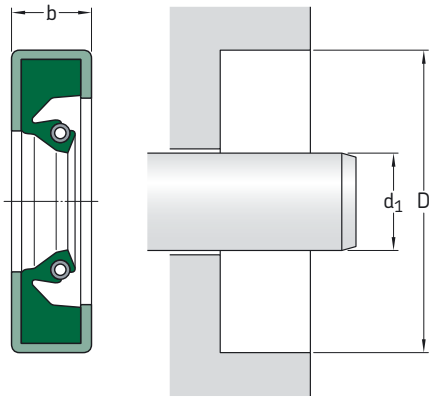

Please see **page 24–25** for housing bore requirements

Dimensions shaft d_1	bore D	nominal seal width b	Design	Lip material	Lug[1]	Designation
in/*mm*			–	–	–	–
6.000 *152,40*	7.500 *190,50*	0.625 *15,88*	HDS1	R		**CR 597623**
6.750 *171,45*	7.750 *196,85*	0.625 *15,88*	HDS1	V		**CR 67512**
7.250 *184,15*	8.750 *222,25*	0.625 *15,88*	HDS2	V		**CR 72510**
7.500 *190,50*	8.750 *222,25*	0.625 *15,88*	HDS1	V		**CR 75048**
7.750 *196,85*	9.000 *228,60*	0.625 *15,88*	HDS1	R		**CR 77531**
	9.250 *234,95*	0.625 *15,88*	HDS1	V		**CR 77539**
8.000 *203,20*	9.250 *234,95*	0.625 *15,88*	HDS1	V		**CR 77996**
	9.500 *241,30*	0.687 *17,45*	HDS2	V		**CR 80009**
	10.000 *254,00*	1.000 *25,40*	HDS1	R		**CR 80088**
8.125 *206,38*	9.378 *238,20*	0.625 *15,88*	HDS1	R		**CR 593198**
	10.125 *257,18*	1.000 *25,40*	HDS1	R		**CR 81253**
8.250 *209,55*	9.500 *241,30*	0.625 *15,88*	HDS2	V		**CR 82526**
	10.250 *260,35*	0.625 *15,88*	HDS2	V		**CR 82559**
8.345 *211,96*	10.750 *273,05*	1.250 *31,75*	HDS1	R		**CR 594186**
8.375 *212,73*	9.750 *247,65*	0.625 *15,88*	HDS3	D	•	**CR 83702**
8.500 *215,90*	9.750 *247,65*	0.625 *15,88*	HDS2	D		**CR 593768**
	10.500 *266,70*	0.625 *15,88*	HDS1	V		**CR 85018**
8.540 *215,90*	9.750 *247,65*	0.625 *15,88*	HDS2	D		**CR 593855**
8.625 *219,08*	10.500 *266,70*	0.750 *19,05*	HDS1	R		**CR 590758**
	10.625 *269,88*	0.750 *19,05*	HDS1	V		**CR 86240**
8.750 *222,25*	10.000 *254,00*	0.625 *15,88*	HDS2	R		**CR 592626**
8.875 *225,43*	10.125 *257,18*	0.625 *15,88*	HDS2	D		**CR 593779**
9.000 *228,60*	10.250 *260,35*	0.750 *19,05*	HDS1	R		**CR 90017**
	10.500 *266,70*	0.625 *15,88*	HDS3	D	•	**CR 90027**
	11.000 *279,40*	0.750 *19,05*	HDS2	R		**CR 590787**
9.125 *231,78*	10.375 *263,53*	0.625 *15,88*	HDS1	R		**CR 592653**
	10.625 *269,88*	0.688 *17,48*	HDS1	R		**CR 590270**
	11.125 *282,58*	0.688 *17,48*	HDS1	R		**CR 590174**
	11.125 *282,50*	0.812 *20,62*	HDS2	R		**CR 91202**
9.250 *234,95*	10.750 *273,05*	0.750 *19,05*	HDS1	R		**CR 590093**
	11.250 *285,75*	0.813 *20,65*	HDS2	V		**CR 92544**
	11.250 *285,75*	1.000 *25,40*	HDS1	R		**CR 590798**
9.375 *238,13*	11.375 *288,93*	0.875 *22,23*	HDS1	R		**CR 93751**
9.438 *239,73*	10.635 *270,13*	0.750 *19,05*	HDS1	R		**CR 593894**
9.500 *241,30*	10.750 *273,05*	0.625 *15,88*	HDS2	R		**CR 95045**
	11.000 *279,40*	0.625 *15,88*	HDS1	R		**CR 590653**
	11.500 *292,10*	0.813 *20,85*	HDS1	V		**CR 95068**
	11.500 *292,10*	1.000 *25,40*	HDS1	R		**CR 590820**

[1] Designed with 4 x 0,5 in adjustable spacer lugs

Please note that the product table only lists a selection of available sizes. These seals are made to order to fit any size request within the ranges stated in **table 8** on **page 30**

Radial shaft seals – HDS1, HDS2, HDS3 – inch dimensions

d_1 **9.688 – 14.375** in

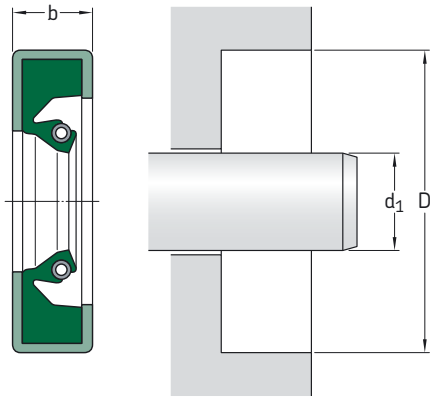

Please see **page 24–25** for housing bore requirements

Dimensions shaft d_1	bore D	nominal seal width b	Design	Lip material	Lug[1]	Designation
in/*mm*			–	–	–	–
9.688	10.875	0.625	HDS1	R		**CR 594080**
246,08	*276,23*	*15,88*				
9.750	11.000	0.625	HDS3	D	•	**CR 97527**
247,65	279,40	15,88				
	11.750	1.000	HDS1	R		**CR 97548**
	298,45	*25,40*				
9.844	11.409	0.625	HDS2	R		**CR 98444**
250,04	*289,79*	*15,88*				
9.875	11.375	0.750	HDS2	R		**CR 592763**
250,83	*288,93*	*19,05*				
	11.500	0.750	HDS1	R		**CR 592727**
	292,10	*19,05*				
9.938	12.000	1.000	HDS2	R		**CR 529752**
252,43	*304,80*	*25,40*				
10.000	11.250	0.625	HDS1	R		**CR 1000110**
254,00	*285,75*	*15,88*				
	11.250	0.625	HDS2	R		**CR 1000111**
	285,75	*15,88*				
	11.500	0.625	HDS3	D	•	**CR 1000239**
	292,10	*15,88*				
	11.750	0.625	HDS1	R		**CR 1000360**
	298,45	*15,88*				
10.125	11.625	0.688	HDS1	R		**CR 1013240**
257,18	*295,28*	*17,48*				
	11.625	0.688	HDS2	R		**CR 1013242**
	295,28	*17,48*				
10.236	12.590	0.984	HDS1	R		**CR 1024690**
259,99	*319,79*	*24,99*				
10.250	11.500	0.625	HDS2	D		**CR 1025112**
260,35	*292,10*	*15,88*				
	11.750	0.688	HDS3	D	•	**CR 1025249**
	298,45	*17,48*				
	11.750	0.750	HDS2	R		**CR 1025252**
	298,45	*19,05*				
10.375	11.625	0.875	HDS1	R		**CR 1038140**
263,53	*295,28*	*22,23*				
10.438	12.438	0.875	HDS1	R		**CR 1044560**
265,13	*315,93*	*22,23*				
10.500	11.750	0.625	HDS1	V		**CR 1050113**
266,70	*298,45*	*15,88*				
	12.000	0.625	HDS3	D	•	**CR 1050239**
	304,80	*15,88*				
	12.000	0.750	HDS2	V		**CR 1050251**
	304,80	*19,05*				
10.688	12.500	0.625	HDS1	V		**CR 1068456**
271,48	*317,50*	*15,88*				
	13.000	0.688	HDS2	V		**CR 1068693**
	330,20	*17,48*				
10.750	12.000	0.625	HDS2	R		**CR 1075112**
273,05	*304,80*	*15,88*				
	12.000	0.625	HDS1	R		**CR 1075110**
	304,80	*15,88*				
	12.250	0.625	HDS1	R		**CR 1075230**
	311,15	*15,88*				
10.938	12.750	0.625	HDS1	R		**CR 1093440**
277,83	*323,85*	*15,88*				
11.000	12.250	0.625	HDS2	D		**CR 1100113**
279,40	*311,15*	*15,88*				
	12.250	0.625	HDS2	V		**CR 1100104**
	311,15	*15,88*				
	12.500	0.750	HDS1	R		**CR 1100250**
	317,50	*19,05*				
	13.000	0.813	HDS2	R		**CR 1100553**
	330,20	*20,65*				
11.250	12.500	0.625	HDS2	R		**CR 1125111**
285,75	*317,50*	*15,88*				
	12.500	0.625	HDS1	R		**CR 1125110**
	317,50	*15,88*				
11.375	13.000	0.750	HDS1	R		**CR 1138330**
288,93	*330,20*	*19,05*				
11.500	13.000	0.750	HDS2	R		**CR 1150253**
292,10	*330,20*	*19,05*				
	13.500	0.813	HDS1	R		**CR 1150550**
	342,90	*20,65*				
	13.500	1.000	HDS1	R		**CR 1150580**
	342,90	*25,40*				

[1] Designed with 4 x 0,5 in adjustable spacer lugs

Please note that the product table only lists a selection of available sizes. These seals are made to order to fit any size request within the ranges stated in **table 8** on **page 30**

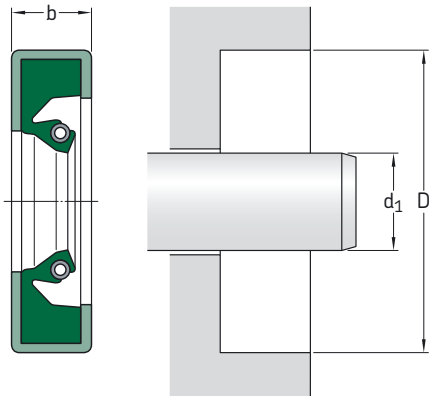

Please see **page 24–25** for housing bore requirements

Dimensions shaft d_1	bore D	nominal seal width b	Design	Lip material	Lug[1]	Designation
in/*mm*			–	–	–	–
11.688	12.938	0.625	HDS1	R		**CR 1169110**
296,88	*328,63*	*15,88*				
11.750	13.250	0.688	HDS2	V		**CR 1175224**
298,45	*336,55*	*17,48*				
	13.250	0.750	HDS2	R		**CR 1175252**
	336,55	*19,05*				
11.811	13.378	0.709	HDS1	R		**CR 1181300**
300,00	*339,80*	*18,01*				
11.813	13.812	0.875	HDS1	R		**CR 1181560**
300,02	*350,82*	*22,23*				
12.000	13.500	0.625	HDS2	R		**CR 1200231**
304,80	*342,90*	*15,88*				
	13.500	0.625	HDS1	R		**CR 1200230**
	342,90	*15,88*				
	13.500	0.625	HDS3	D	•	**CR 1200239**
	342,90	*15,88*				
	13.500	0.688	HDS1	R		**CR 1200240**
	342,90	*17,48*				
	13.500	0.750	HDS2	R		**CR 1200255**
	342,90	*19,05*				
	14.000	0.625	HDS1	V		**CR 1200523**
	355,60	*15,88*				
	14.000	1.000	HDS2	R		**CR 1200585**
	355,60	*25,40*				
12.250	13.750	0.625	HDS3	D	•	**CR 1225239**
311,15	*349,25*	*15,88*				
12.500	13.750	0.625	HDS1	R		**CR 1250110**
317,50	*349,25*	*15,88*				
	14.000	0.688	HDS3	D	•	**CR 1250249**
	355,60	*17,48*				
	14.500	0.750	HDS1	R		**CR 1250540**
	368,30	*19,05*				
	14.500	0.813	HDS2	V		**CR 1250554**
	368,30	*20,65*				
12.750	14.250	0.688	HDS2	V		**CR 1275243**
323,85	*361,95*	*17,48*				
	14.250	0.750	HDS2	R		**CR 1275252**
	361,95	*19,05*				

Dimensions shaft d_1	bore D	nominal seal width b	Design	Lip material	Lug[1]	Designation
in/*mm*			–	–	–	–
13.000	14.500	0.688	HDS2	R		**CR 1300244**
330,20	*368,30*	*17,48*				
	14.500	0.688	HDS2	V		**CR 1300283**
	368,30	*17,48*				
	15.000	0.750	HDS2	R		**CR 1300542**
	381,00	*19,05*				
13.250	14.750	0.625	HDS3	D	•	**CR 1325239**
336,55	*374,65*	*15,88*				
	14.750	0.688	HDS2	R		**CR 1325242**
	374,65	*17,48*				
13.500	15.250	0.750	HDS1	R		**CR 1350380**
342,90	*387,35*	*19,05*				
	15.500	0.813	HDS2	V		**CR 1350564**
	393,70	*20,65*				
13.750	15.000	0.750	HDS1	R		**CR 1375130**
349,25	*381,00*	*19,05*				
	15.250	0.625	HDS1	R		**CR 1375230**
	387,35	*15,88*				
	15.250	0.688	HDS1	R		**CR 1375240**
	387,35	*17,48*				
	15.500	0.750	HDS1	R		**CR 1375380**
	393,70	*19,05*				
	15.750	0.813	HDS2	V		**CR 1375553**
	400,05	*20,65*				
14.000	15.500	0.625	HDS2	V		**CR 1400234**
355,60	*393,70*	*15,88*				
	15.500	0.625	HDS2	R		**CR 1400232**
	393,70	*15,88*				
	15.500	0.750	HDS1	R		**CR 1400250**
	393,70	*19,05*				
	15.750	0.688	HDS1	R		**CR 1400370**
	400,05	*17,48*				
	16.000	1.000	HDS1	R		**CR 1400580**
	406,40	*25,40*				
14.250	15.750	0.750	HDS2	R		**CR 1425252**
361,95	*400,05*	*19,05*				
	16.250	0.813	HDS2	R		**CR 1425552**
	412,75	*20,65*				
14.375	16.000	0.688	HDS2	D		**CR 1438321**
365,13	*406,40*	*17,48*				

[1] Designed with 4 x 0,5 in adjustable spacer lugs

Please note that the product table only lists a selection of available sizes. These seals are made to order to fit any size request within the ranges stated in **table 8** on **page 30**

Radial shaft seals – HDS1, HDS2, HDS3 – inch dimensions

d_1 **14.500 – 34.500** in

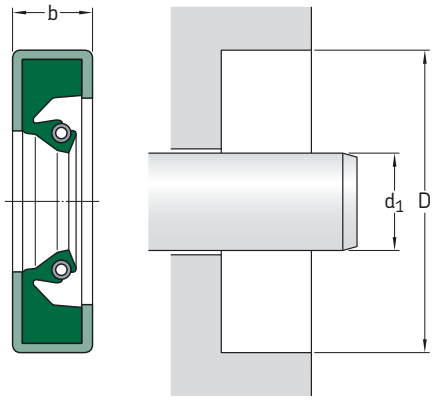

Please see **page 24–25** for housing bore requirements

Dimensions shaft d_1	bore D	nominal seal width b	Design	Lip material	Lug[1]	Designation
in/*mm*			–	–	–	–
14.500	16.000	0.688	HDS2	R		**CR 1450242**
368,30	*406,40*	*17,48*				
	16.500	0.750	HDS2	R		**CR 1450542**
	419,10	*19,05*				
14.750	16.500	0.875	HDS2	R		**CR 1475411**
374,65	*419,10*	*22,23*				
15.000	16.500	0.688	HDS1	R		**CR 1500240**
381,00	*419,10*	*17,48*				
	16.500	0.750	HDS1	R		**CR 1500250**
	419,10	*19,05*				
	16.750	0.750	HDS1	R		**CR 1500380**
	425,45	*19,05*				
	17.000	0.750	HDS3	D	•	**CR 1500549**
	431,80	*19,05*				
15.250	16.750	0.750	HDS2	R		**CR 1525252**
387,35	*425,45*	*19,05*				
	17.250	0.750	HDS2	R		**CR 1525542**
	438,15	*19,05*				
	17.250	0.875	HDS1	R		**CR 1525560**
	438,15	*22,23*				
15.500	16.875	0.625	HDS1	R		**CR 1550160**
393,70	*428,63*	*15,88*				
	17.500	0.750	HDS2	R		**CR 1550542**
	444,50	*19,05*				
	17.500	0.813	HDS1	R		**CR 1550550**
	444,50	*20,62*				
15.625	17.625	0.875	HDS1	R		**CR 1563560**
396,88	*447,68*	*22,23*				
15.750	17.250	0.688	HDS3	D	•	**CR 1575249**
400,05	*438,15*	*17,48*				
16.000	17.500	0.750	HDS1	R		**CR 1600250**
406,40	*444,50*	*19,05*				
	18.000	1.000	HDS2	R		**CR 1600585**
	457,20	*25,40*				
16.250	17.750	0.688	HDS1	R		**CR 1625240**
412,75	*450,85*	*17,48*				
16.500	18.000	0.750	HDS2	R		**CR 1650252**
419,10	*457,20*	*19,05*				
16.750	18.500	0.875	HDS1	V		**CR 1675413**
425,45	*469,90*	*22,23*				
17.000	18.500	0.688	HDS2	R		**CR 1700245**
431,80	*469,90*	*17,48*				
	18.500	0.750	HDS2	D		**CR 1700251**
	469,90	*19,05*				
	19.000	0.750	HDS2	R		**CR 1700541**
	482,60	*19,05*				
17.250	18.750	0.750	HDS2	R		**CR 1725255**
438,15	*476,25*	*19,05*				
17.500	19.000	0.625	HDS1	R		**CR 1750230**
444,50	*482,60*	*15,88*				
	19.250	0.688	HDS1	R		**CR 1750370**
	488,95	*17,48*				
	19.500	0.688	HDS1	R		**CR 1750530**
	495,30	*17,48*				
17.625	19.250	0.688	HDS1	R		**CR 1763320**
447,68	*488,95*	*17,48*				
18.000	19.500	0.688	HDS3	D	•	**CR 1800249**
457,20	*495,30*	*17,48*				
	19.750	0.750	HDS2	R		**CR 1800382**
	501,65	*19,05*				
18.250	19.750	0.750	HDS2	R		**CR 1825252**
463,55	*501,65*	*19,05*				
18.500	20.500	0.875	HDS1	R		**CR 1850560**
469,90	*520,70*	*22,23*				
18.750	20.750	0.813	HDS2	R		**CR 1875553**
476,25	*527,05*	*20,65*				
19.000	20.500	0.750	HDS1	R		**CR 1900250**
482,60	*520,70*	*19,05*				
	21.000	0.875	HDS2	V		**CR 1900562**
	533,40	*22,23*				
19.250	21.250	0.938	HDS1	R		**CR 1925570**
488,95	*539,75*	*23,24*				
19.500	21.500	0.875	HDS1	R		**CR 1950560**
495,30	*546,10*	*22,23*				

[1] Designed with 4 x 0,5 in adjustable spacer lugs

Please note that the product table only lists a selection of available sizes. These seals are made to order to fit any size request within the ranges stated in **table 8** on **page 30**

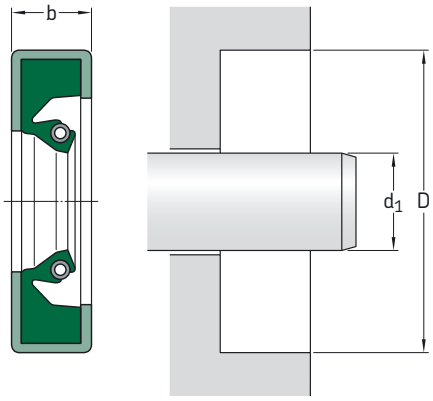

Please see **page 24–25** for housing bore requirements

Dimensions shaft d_1	bore D	nominal seal width b	Design	Lip material	Lug[1]	Designation
in/*mm*			–	–	–	–
20.000 *508,00*	21.500 *546,10*	0.625 *15,88*	HDS3	D	•	**CR 2000239**
20.250 *514,35*	21.750 *552,45*	0.750 *19,05*	HDS1	R		**CR 2025250**
20.500 *520,70*	22.500 *571,50*	0.750 *19,05*	HDS2	R		**CR 2050542**
	22.500 *571,50*	0.875 *22,23*	HDS1	R		**CR 2050560**
20.750 *527,05*	22.750 *577,85*	0.875 *22,23*	HDS2	D		**CR 2075562**
21.000 *533,40*	22.750 *577,85*	0.813 *20,62*	HDS1	R		**CR 2100390**
	23.000 *584,20*	0.625 *15,87*	HDS3	D	•	**CR 2100529**
21.500 *546,10*	23.500 *596,90*	0.813 *20,62*	HDS1	R		**CR 2150550**
22.000 *558,80*	23.500 *596,90*	0.750 *15,88*	HDS2	V		**CR 2200213**
	24.000 *609,60*	0.875 *22,23*	HDS2	R		**CR 2200565**
	24.000 *609,60*	1.250 *31,75*	HDS1	D		**CR 526339**
22.250 *565,15*	24.250 *615,95*	0.875 *22,23*	HDS3	H	•	**CR 2225568**
23.000 *584,20*	24.750 *628,65*	0.750 *19,05*	HDS2	V		**CR 2300384**
23.500 *596,90*	25.500 *647,70*	0.875 *22,23*	HDS1	R		**CR 2350560**
24.000 *609,60*	25.500 *647,70*	0.750 *19,05*	HDS1	R		**CR 2400250**
	26.000 *660,40*	0.875 *22,23*	HDS2	R		**CR 2400559**
24.250 *615,95*	26.250 *666,75*	0.875 *22,23*	HDS2	V		**CR 2425562**
25.000 *635,00*	27.000 *685,80*	1.000 *25,40*	HDS1	R		**CR 2500580**
25.500 *647,70*	27.500 *698,50*	1.000 *25,40*	HDS2	R		**CR 2550585**
26.000 *660,40*	27.625 *701,68*	0.750 *19,05*	HDS2	R		**CR 2600332**
26.000 *660,40*	28.500 *723,90*	0.875 *22,23*	HDS1	R		**CR 2600760**
26.500 *673,10*	28.500 *723,90*	0.875 *22,23*	HDS1	R		**CR 2650560**
28.000 *711,20*	29.625 *752,48*	0.750 *19,05*	HDS2	R		**CR 2800331**
	30.000 *762,00*	0.875 *22,23*	HDS2	R		**CR 2800565**
29.000 *736,60*	31.000 *787,40*	0.875 *22,23*	HDS2	R		**CR 2900563**
29.500 *749,30*	31.500 *800,10*	0.875 *22,23*	HDS2	D		**CR 2950564**
30.250 *768,35*	32.500 *825,50*	0.875 *22,23*	HDS1	R		**CR 3025660**
30.500 *774,70*	32.500 *825,50*	0.875 *22,23*	HDS2	V		**CR 3050514**
	33.000 *838,20*	1.000 *25,40*	HDS2	R		**CR 3050785**
31.000 *787,40*	33.000 *838,20*	0.813 *20,62*	HDS1	R		**CR 3100550**
32.500 *825,50*	34.500 *876,30*	0.875 *22,23*	HDS1	R		**CR 3250560**
33.000 *838,20*	34.688 *881,08*	0.750 *19,05*	HDS2	R		**CR 3300351**
33.500 *850,90*	36.000 *914,40*	0.875 *22,23*	HDS1	R		**CR 3350760**
34.000 *863,60*	36.000 *914,40*	0.875 *22,23*	HDS1	R		**CR 3400560**
34.500 *876,30*	36.500 *927,10*	0.875 *22,23*	HDS2	D		**CR 3450563**

[1] Designed with 4 x 0,5 in adjustable spacer lugs

Please note that the product table only lists a selection of available sizes. These seals are made to order to fit any size request within the ranges stated in **table 8** on **page 30**

Radial shaft seals – HDS1, HDS2, HDS3 – inch dimensions

d_1 **37.500 – 63.340** in

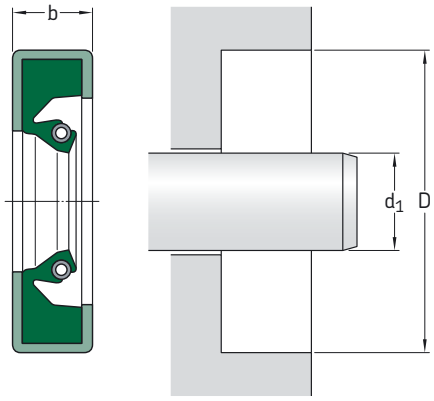

Please see **page 24–25** for housing bore requirements

Dimensions			Design	Lip material	Lug[1)]	Designation
shaft	bore	nominal seal width				
d_1	D	b				
in/*mm*			–	–	–	–
37.500	39.000	0.875	HDS2	R		**CR 3750272**
952,50	*990,60*	*22,23*				
	39.500	0.875	HDS1	D		**CR 3750561**
	1 003,30	*22,23*				
38.000	40.000	0.875	HDS2	R		**CR 3800565**
965,20	*1 016,00*	*22,23*				
40.500	43.000	0.875	HDS2	V		**CR 4050774**
1 028,70	*1 092,20*	*22,23*				
43.500	45.500	0.875	HDS2	R		**CR 4350565**
1 104,90	*1 155,70*	*22,23*				
	45.500	0.875	HDS1	R		**CR 4350560**
	1 155,70	*22,23*				
45.000	47.000	0.875	HDS1	R		**CR 4500560**
1 143,00	*1 193,80*	*22,23*				
46.000	47.500	0.750	HDS2	H		**CR 4600252**
1 168,40	*1 206,50*	*19,05*				
49.000	50.625	0.813	HDS1	R		**CR 4900340**
1 244,60	*1 285,88*	*20,65*				
51.500	53.500	1.500	HDS1	R		**CR 5150590**
1 308,10	*1 358,90*	*38,10*				
54.750	56.375	0.875	HDS1	R		**CR 5475340**
1 390,65	*1 431,93*	*22,23*				
62.500	64.000	0.875	HDS1	R		**CR 6250270**
1 587,50	*1 625,60*	*22,23*				
63.340	64.500	0.750	HDS2	D		**CR 6334342**
1 608,84	*1 638,30*	*19,05*				

Radial shaft seals – HDS1K – inch dimensions

d_1 **7.939** in

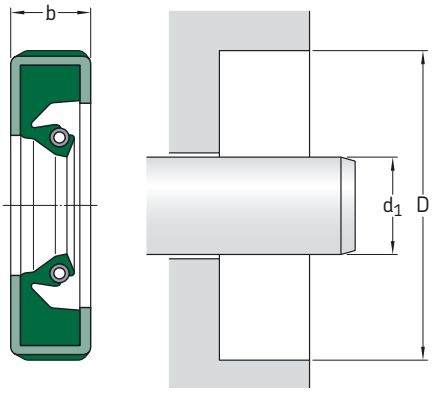

Please see **page 24–25** for housing bore requirements

Dimensions			Design	Lip material	Designation
shaft	bore	nominal seal width			
d_1	D	b			
in/*mm*			–	–	–
7.939	10.125	0.688	HDS1K	H	**CR 597606**
201,651	*257,175*	*17,475*			

[1)] Designed with 4 x 0,5 in adjustable spacer lugs

Please note that the product table only lists a selection of available sizes. These seals are made to order to fit any size request within the ranges stated in **table 8** on **page 30**

Radial shaft seals – HDS2K – metric dimensions

d_1 **340 – 876,3** mm

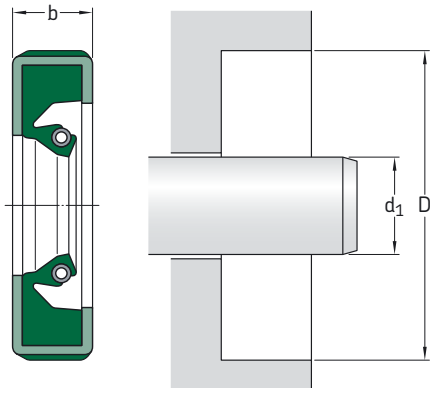

Please see **page 24–25** for housing bore requirements

Dimensions shaft d_1	bore D	nominal seal width b	**Design**	**Lip material**	**Designation**
mm			–	–	–
340	380	18	HDS2K	V	**CR 1338230**
360	404	20	HDS2K	R	**CR 1417432**
400	450	18	HDS2K	R	**CR 1574572**
810	874	25	HDS2K	R	**CR 3189768**
876,3	927,1	22,2	HDS2K	R	**CR 3450515**

Radial shaft seals – HDS2K – inch dimensions

d_1 **16.500** in

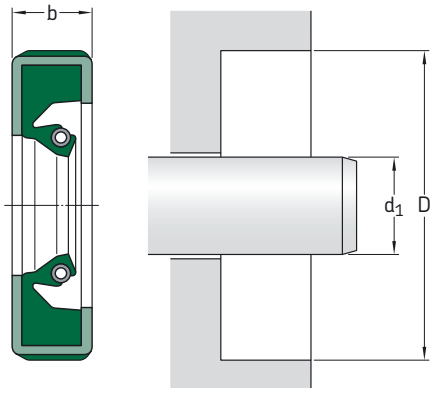

Please see **page 24–25** for housing bore requirements

Dimensions shaft d_1	bore D	nominal seal width b	**Design**	**Lip material**	**Designation**
in/*mm*			–	–	–
16.500 *419,1*	18 *457,2*	0.75 *19,05*	HDS2K	R	**CR 1650230**

Please note that the product table only lists a selection of available sizes. These seals are made to order to fit any size request within the ranges stated in **table 8** on **page 30**

Radial shaft seals – HDSA1-2, HDSB1-2, HDSC1-2 – metric dimensions

d_1 **240 – 790** mm

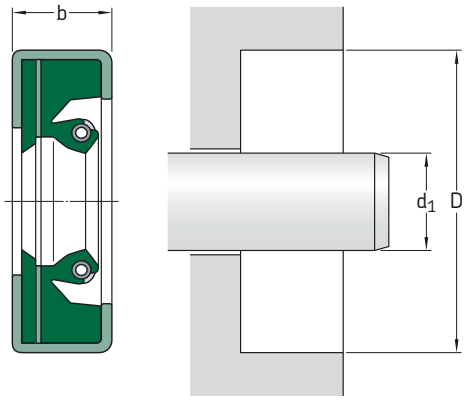

Please see **page 24–25** for housing bore requirements

Dimensions shaft d_1	bore D	nominal seal width b	**Design**	**Lip material**	**Designation**
mm			–	–	–
240,00	280,00	23,00	HDSA1	RD	**CR 595573**
270,00	330,00	25,40	HDSA1	RD	**CR 1063960**
310,00	370,00	25,40	HDSA1	RD	**CR 1220960**
317,00	352,00	23,00	HDSA1	RD	**CR 1248920**
320,00	360,00	22,23	HDSC1	VD	**CR 1259937**
	360,00	25,00	HDSB2	RD	**CR 1259928**
	380,00	28,00	HDSA2	RD	**CR 1259962**
364,00	420,00	25,00	HDSA2	RD	**CR 1433962**
380,00	420,00	22,20	HDSA2	VD	**CR 1496944**
	440,00	28,00	HDSA2	RD	**CR 1496972**
390,00	434,00	22,00	HDSA2	VD	**CR 1535934**
400,00	460,00	28,00	HDSA2	RD	**CR 1574972**
420,00	460,00	22,23	HDSC1	VD	**CR 1653927**
430,00	470,00	20,00	HDSB1	RD	**CR 1692920**
440,00	480,00	22,23	HDSA2	VD	**CR 1732934**
560,00	620,00	30,00	HDSA2	RD	**CR 2204962**
580,00	640,00	30,00	HDSA2	RD	**CR 2283972**
	640,00	30,00	HDSB1	RD	**CR 2283980**
790,00	850,00	25,00	HDSA1	RD	**CR 3110978**

Please note that the product table only lists a selection of available sizes. These seals are made to order to fit any size request within the ranges stated in **table 8** on **page 30**

Radial shaft seals – HDSA1-2, HDSB1-2, HDSC1-2 – inch dimensions

d_1 **6.000 – 9.875** in

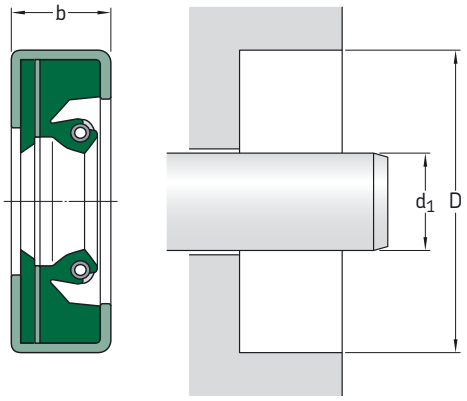

Please see **page 24–25** for housing bore requirements

Dimensions shaft d_1	bore D	nominal seal width b	Design	Lip material	Designation
in/*mm*			–	–	–
6.000	7.500	0.750	HDSA1	RD	**CR 597625**
152,40	*190,50*	*19,05*			
6.625	8.125	0.875	HDSA2	VD	**CR 594828**
168,28	*206,38*	*22,23*			
7.250	8.750	0.875	HDSA2	VD	**CR 72594**
184,15	*222,25*	*22,23*			
8.000	10.000	1.000	HDSB1	RD	**CR 592328**
203,20	*254,00*	*25,40*			
	10.000	1.250	HDSC1	RD	**CR 590727**
	254,00	*31,75*			
	10.000	1.250	HDSA1	RD	**CR 592336**
	254,00	*31,75*			
	10.125	1.250	HDSB1	RD	**CR 80092**
	257,18	*31,75*			
8.250	10.250	0.875	HDSB1	RD	**CR 591921**
209,55	*260,35*	*22,23*			
	10.250	1.250	HDSB1	RD	**CR 590357**
	260,35	*31,75*			
8.500	9.750	0.870	HDSA2	DD	**CR 595513**
215,90	*247,65*	*22,22*			
	10.000	0.875	HDSA1	VD	**CR 596196**
	254,00	*22,23*			
	10.000	1.000	HDSA1	RD	**CR 590731**
	254,00	*25,40*			
	10.500	0.875	HDSA1	VD	**CR 592798**
	266,70	*22,23*			
	10.500	1.000	HDSB1	RD	**CR 592149**
	266,70	*25,40*			
	10.500	1.000	HDSA2	VD	**CR 594902**
	266,70	*25,40*			
	10.500	1.250	HDSA1	RD	**CR 590245**
	266,70	*31,75*			
8.750	10.250	0.875	HDSC1	RD	**CR 594333**
222,25	*260,35*	*22,22*			
	10.750	0.875	HDSA1	RD	**CR 592492**
	273,05	*22,23*			
8.875	10.125	0.875	HDSA2	DD	**CR 595127**
225,43	*257,18*	*22,23*			
	10.875	0.875	HDSA1	RD	**CR 591984**
	276,23	*22,23*			
	11.250	0.875	HDSA1	RD	**CR 592464**
	285,75	*22,23*			

Dimensions shaft d_1	bore D	nominal seal width b	Design	Lip material	Designation
in/*mm*			–	–	–
9.000	10.250	0.875	HDSA2	VD	**CR 90054**
228,60	*260,35*	*22,23*			
	10.500	0.875	HDSA1	RD	**CR 597343**
	266,70	*22,23*			
	11.000	1.000	HDSA2	VD	**CR 594903**
	279,40	*25,40*			
9.250	10.438	0.875	HDSA1	RD	**CR 92591**
234,95	*265,13*	*22,23*			
	11.000	1.375	HDSA1	RD	**CR 592452**
	279,40	*34,93*			
	11.250	0.875	HDSA1	VD	**CR 593312**
	285,75	*22,23*			
9.375	12.750	1.250	HDSB1	RD	**CR 590688**
238,13	*323,85*	*31,75*			
9.500	11.500	1.250	HDSA2	RD	**CR 590375**
241,30	*292,10*	*31,75*			
	11.500	1.250	HDSC1	DD	**CR 591960**
	292,10	*31,75*			
	11.500	1.250	HDSA2	DD	**CR 593667**
	292,10	*31,75*			
9.620	12.750	1.250	HDSA1	RD	**CR 96290**
244,35	*323,85*	*31,75*			
9.625	11.625	1.000	HDSC1	RD	**CR 593659**
244,48	*295,28*	*25,40*			
9.750	11.000	0.875	HDSA1	RD	**CR 593053**
247,65	*279,40*	*22,23*			
	11.000	1.000	HDSA1	DD	**CR 593428**
	279,40	*25,40*			
	11.125	0.875	HDSA2	DD	**CR 594974**
	282,58	*22,23*			
	11.250	0.875	HDSA2	DD	**CR 595514**
	285,75	*22,23*			
	11.750	1.000	HDSA1	DD	**CR 595568**
	298,45	*25,40*			
9.844	11.409	0.875	HDSC2	RD	**CR 595219**
250,04	*289,79*	*22,23*			
9.875	11.875	1.000	HDSA2	RD	**CR 592847**
250,83	*301,63*	*25,40*			

Please note that the product table only lists a selection of available sizes. These seals are made to order to fit any size request within the ranges stated in **table 8** on **page 30**

Radial shaft seals – HDSA1-2, HDSB1-2, HDSC1-2 – inch dimensions

d_1 **10.000 – 14.000** in

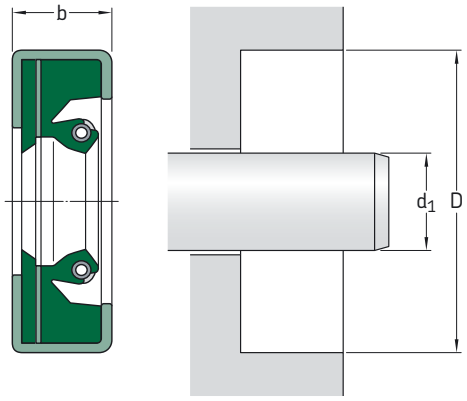

Please see **page 24–25** for housing bore requirements

Dimensions shaft d_1	bore D	nominal seal width b	Design	Lip material	Designation
in/*mm*			–	–	–
10.000	11.250	0.875	HDSA1	RD	**CR 1000910**
254,00	*285,75*	*22,23*			
	11.250	0.875	HDSA2	VD	**CR 1000914**
	285,75	*22,23*			
	11.500	1.250	HDSA1	RD	**CR 1000920**
	292,10	*31,75*			
	11.750	0.938	HDSC2	DD	**CR 1000943**
	298,45	*23,83*			
	11.750	1.000	HDSC1	RD	**CR 1000941**
	298,45	*25,40*			
	12.000	0.875	HDSA1	RD	**CR 1000950**
	304,80	*22,23*			
	12.000	1.250	HDSA1	RD	**CR 1000952**
	304,80	*31,75*			
	12.000	1.250	HDSB1	RD	**CR 1000953**
	304,80	*31,75*			
	12.000	1.500	HDSA1	RD	**CR 1000954**
	304,80	*38,10*			
	12.500	1.000	HDSA1	RD	**CR 1000971**
	317,50	*25,40*			
10.125	11.750	0.938	HDSC1	RD	**CR 1013930**
257,18	*298,45*	*23,83*			
10.250	12.250	1.250	HDSC1	RD	**CR 1025951**
260,35	*311,15*	*31,75*			
10.375	11.625	0.875	HDSA2	DD	**CR 1037912**
263,53	*295,28*	*22,23*			
10.500	12.000	0.875	HDSC1	RD	**CR 1050916**
266,70	*304,80*	*22,23*			
	12.500	1.000	HDSA1	RD	**CR 1050956**
	317,50	*25,40*			
	12.500	1.000	HDSB1	RD	**CR 1050958**
	317,50	*25,40*			
	12.500	1.000	HDSA1	VT	**CR 1050966**
	317,50	*25,40*			
10.625	12.500	0.969	HDSA1	RD	**CR 1062945**
269,88	*317,50*	*24,61*			
	13.000	1.000	HDSB1	RD	**CR 1063971**
	330,20	*25,40*			
10.688	12.500	1.000	HDSA1	RD	**CR 1068940**
271,48	*317,50*	*25,40*			

Dimensions shaft d_1	bore D	nominal seal width b	Design	Lip material	Designation
in/*mm*			–	–	–
10.750	12.250	0.875	HDSC1	RD	**CR 1075928**
273,05	*311,15*	*22,23*			
	12.250	1.025	HDSC1	RD	**CR 1075910**
	311,15	*25,02*			
	12.500	0.875	HDSA2	RD	**CR 1075942**
	317,50	*22,23*			
	13.371	1.250	HDSB1	RD	**CR 107591**
	339,62	*31,75*			
11.000	12.500	1.250	HDSA1	RD	**CR 1100918**
279,40	*317,50*	*31,75*			
	13.000	0.875	HDSA1	RD	**CR 1100950**
	330,20	*22,23*			
	13.000	1.000	HDSA1	RD	**CR 1100951**
	330,20	*25,40*			
	13.000	1.250	HDSA1	RD	**CR 1100952**
	330,20	*31,75*			
	13.000	1.250	HDSB1	RD	**CR 1100953**
	330,20	*31,75*			
	13.000	1.250	HDSC1	RD	**CR 1100954**
	330,20	*31,75*			
	13.500	1.250	HDSA1	RD	**CR 1100971**
	342,90	*31,75*			
11.417	12.994	0.875	HDSA1	VD	**CR 1141937**
290,00	*330,00*	*22,23*			
	13.000	0.875	HDSA2	VD	**CR 1141273**
	330,20	*22,23*			
11.500	13.000	0.750	HDSA1	RD	**CR 115025**
292,10	*330,20*	*19,05*			
	13.000	0.875	HDSA1	DD	**CR 1150925**
	330,20	*22,23*			
	13.000	1.063	HDSA1	RD	**CR 1150920**
	330,20	*27,00*			
11.750	13.250	0.875	HDSC1	RD	**CR 1175920**
298,45	*336,55*	*22,23*			
	13.250	0.875	HDSA2	VD	**CR 1175924**
	336,55	*22,23*			
	13.250	0.875	HDSA2	RD	**CR 527709**
	336,55	*22,23*			
	13.750	1.250	HDSB1	RD	**CR 1175952**
	349,25	*31,75*			

Please note that the product table only lists a selection of available sizes. These seals are made to order to fit any size request within the ranges stated in **table 8** on **page 30**

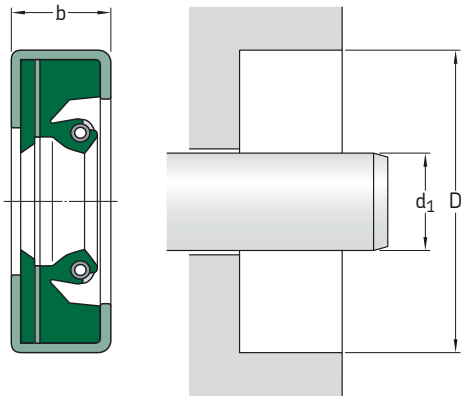

Please see **page 24–25** for housing bore requirements

Dimensions shaft d_1	bore D	nominal seal width b	Design	Lip material	Designation
in/*mm*			–	–	–
12.000	13.500	0.875	HDSA1	RD	**CR 1200920**
304,80	*342,90*	*22,23*			
	14.000	0.844	HDSA2	VD	**CR 1200962**
	355,60	*21,44*			
	14.000	1.000	HDSB1	RD	**CR 1200958**
	355,60	*25,40*			
	14.000	1.250	HDSB1	RD	**CR 1200952**
	355,60	*31,75*			
12.250	13.750	0.875	HDSC1	RD	**CR 1225928**
311,15	*349,25*	*22,23*			
	13.750	1.105	HDSC1	RD	**CR 1225920**
	349,25	*28,07*			
	14.250	1.250	HDSA2	RD	**CR 1225588**
	361,95	*20,65*			
	14.250	1.250	HDSA1	RD	**CR 1225960**
	361,95	*31,75*			
12.500	13.750	0.906	HDSA2	RD	**CR 1250912**
317,50	*349,25*	*23,01*			
	14.000	0.875	HDSA2	DD	**CR 1250272**
	356,60	*22,23*			
	14.000	0.875	HDSA2	DD	**CR 1250922**
	355,60	*22,23*			
	14.500	1.250	HDSA1	RD	**CR 1250950**
	368,30	*31,75*			
12.750	14.750	1.250	HDSB1	RD	**CR 1275950**
323,85	*374,65*	*31,75*			
12.875	14.125	0.875	HDSA2	RD	**CR 1287912**
327,03	*358,78*	*22,23*			
13.000	14.500	0.875	HDSA1	RD	**CR 1300900**
330,20	*368,30*	*22,23*			
	14.500	0.875	HDSB1	RD	**CR 1300929**
	368,30	*22,23*			
	14.500	1.000	HDSA1	RD	**CR 1300920**
	368,30	*25,40*			

Dimensions shaft d_1	bore D	nominal seal width b	Design	Lip material	Designation
in/*mm*			–	–	–
13.250	14.750	0.906	HDSA2	DD	**CR 1325922**
336,55	*374,65*	*32,01*			
	14.750	0.906	HDSA2	VD	**CR 1325928**
	374,65	*23,01*			
	14.875	1.000	HDSA2	DD	**CR 1325932**
	377,83	*25,40*			
	15.000	1.250	HDSA1	RD	**CR 1325940**
	381,00	*31,75*			
	15.250	1.000	HDSA1	RD	**CR 1325950**
	387,35	*25,40*			
13.386	15.000	0.875	HDSA2	VD	**CR 1338273**
340,00	*381,00*	*22,23*			
13.500	15.500	0.875	HDSA2	RD	**CR 1350954**
342,90	*393,70*	*22,23*			
	15.500	1.250	HDSB1	RD	**CR 1350970**
	393,70	*31,75*			
	15.500	1.250	HDSB1	VD	**CR 593517**
	393,70	*31,75*			
13.750	15.500	0.875	HDSA1	VD	**CR 1375418**
349,25	*393,70*	*22,23*			
13.875	15.125	0.875	HDSA2	RD	**CR 1387912**
352,43	*384,18*	*22,23*			
13.938	15.744	1.250	HDSA2	RD	**CR 1394942**
354,03	*399,90*	*31,75*			
14.000	15.500	0.875	HDSC1	RD	**CR 1400928**
355,60	*393,70*	*22,23*			
	15.500	0.985	HDSC1	RD	**CR 1400910**
	393,70	*25,02*			
	15.500	1.000	HDSA1	RD	**CR 1400925**
	393,90	*25,40*			
	16.000	1.000	HDSA1	VT	**CR 1400957**
	406,40	*25,40*			
14.000	16.000	1.375	HDSA1	RD	**CR 1400950**
355,60	*406,40*	*34,93*			
	16.250	1.000	HDSA2	RD	**CR 1400965**
	412,75	*25,40*			
	16.250	1.000	HDSA2	VD	**CR 528307**
	412,75	*25,40*			
	16.750	0.968	HDSB2	RD	**CR 1400981**
	425,45	*24,59*			

Please note that the product table only lists a selection of available sizes. These seals are made to order to fit any size request within the ranges stated in **table 8** on **page 30**

Radial shaft seals – HDSA1-2, HDSB1-2, HDSC1-2 – inch dimensions

d_1 **14.250 – 46.840** in

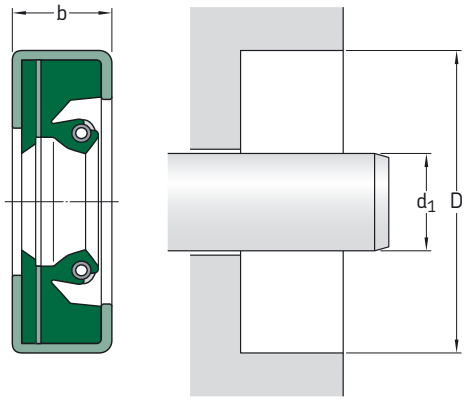

Please see **page 24–25** for housing bore requirements

Dimensions shaft d_1	bore D	nominal seal width b	Design	Lip material	Designation
in/*mm*			–	–	–
14.250	15.750	1.000	HDSA1	RD	**CR 1425920**
361,95	*400,05*	*25,40*			
	16.250	1.000	HDSB1	RD	**CR 1425950**
	412,75	*25,40*			
14.400	15.587	0.875	HDSB1	RD	**CR 1440901**
365,76	*395,91*	*22,23*			
14.500	16.000	0.870	HDSC2	DD	**CR 1450922**
368,30	*406,40*	*22,22*			
15.000	17.000	0.875	HDSA1	RD	**CR 1500951**
381,00	*431,80*	*22,23*			
	17.000	1.250	HDSA1	RD	**CR 1500950**
	431,80	*31,75*			
	17.500	1.000	HDSA1	RD	**CR 1500973**
	444,50	*25,40*			
15.125	16.375	0.875	HDSA2	RD	**CR 1512912**
384,18	*415,93*	*22,23*			
15.313	17.313	0.813	HDSA2	RD	**CR 592865**
388,95	*439,75*	*20,65*			
	17.313	0.875	HDSA1	RD	**CR 1531950**
	439,72	*22,23*			
15.375	16.625	0.875	HDSA2	RD	**CR 1537142**
390,53	*422,28*	*22,23*			
15.750	17.750	1.250	HDSA1	RD	**CR 1575910**
400,05	*450,85*	*31,75*			
16.000	18.000	0.875	HDSA1	RD	**CR 1600951**
406,40	*457,20*	*22,23*			
	18.000	1.000	HDSA2	RD	**CR 1600955**
	457,20	*25,40*			
	18.000	1.125	HDSB1	RD	**CR 1600940**
	457,20	*28,58*			
	18.000	1.125	HDSA1	RD	**CR 1600941**
	457,20	*28,58*			
16.375	17.562	1.000	HDSA1	RD	**CR 1637901**
415,93	*446,07*	*25,40*			
17.000	18.250	0.875	HDSA2	RD	**CR 1700142**
431,80	*463,55*	*22,23*			
	19.000	1.250	HDSA1	RD	**CR 1700950**
	482,60	*31,75*			

Dimensions shaft d_1	bore D	nominal seal width b	Design	Lip material	Designation
in/*mm*			–	–	–
17.500	19.000	1.250	HDSA1	RD	**CR 1750920**
444,50	*482,60*	*31,75*			
	19.500	1.000	HDSA2	RD	**CR 1750958**
	495,30	*25,40*			
	19.500	1.250	HDSA1	RD	**CR 1750952**
	495,30	*31,75*			
18.000	20.000	1.500	HDSA1	RD	**CR 1800950**
457,20	*508,00*	*38,10*			
	20.250	1.000	HDSA2	RD	**CR 1800965**
	514,35	*25,40*			
	20.250	1.000	HDSA2	VD	**CR 528308**
	514,35	*25,40*			
18.500	20.500	0.968	HDSA2	VD	**CR 1850952**
469,90	*520,70*	*24,59*			
19.000	21.000	1.250	HDSC1	RD	**CR 1900950**
482,60	*533,40*	*31,75*			
19.250	20.750	0.875	HDSA1	RD	**CR 1925920**
488,95	*527,05*	*22,23*			
19.500	21.500	1.250	HDSA1	RD	**CR 1950950**
495,30	*546,10*	*31,75*			
19.750	22.125	1.000	HDSA1	RD	**CR 1975972**
501,65	*561,98*	*25,40*			
20.000	21.250	1.375	HDSA1	RD	**CR 2000913**
508,00	*539,75*	*34,93*			
	21.500	0.875	HDSA1	VD	**CR 593789**
	546,10	*22,23*			
20.438	22.500	1.000	HDSA1	RD	**CR 2044580**
519,13	*571,50*	*25,40*			
20.500	22.000	1.500	HDSA2	RD	**CR 2050282**
520,70	*558,80*	*38,10*			
	22.500	0.875	HDSA2	VD	**CR 2050954**
	571,50	*22,23*			
20.750	22.750	1.250	HDSA1	RD	**CR 2075950**
527,05	*577,85*	*31,75*			
21.000	22.250	1.375	HDSA1	RD	**CR 2100913**
533,40	*565,15*	*34,93*			
	23.000	0.875	HDSC2	RD	**CR 2100955**
	584,20	*22,23*			

Please note that the product table only lists a selection of available sizes. These seals are made to order to fit any size request within the ranges stated in **table 8** on **page 30**

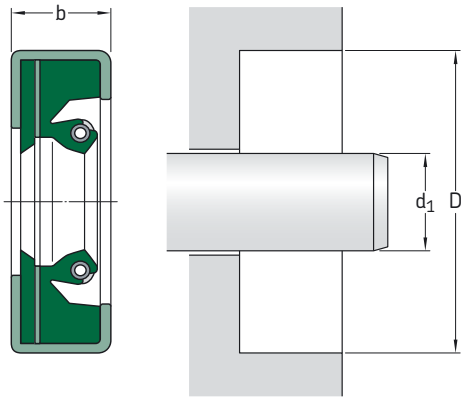

Please see **page 24–25** for housing bore requirements

Dimensions shaft d_1	bore D	nominal seal width b	**Design**	**Lip material**	**Designation**
in/*mm*			–	–	–
21.250	23.000	0.875	HDSA1	RD	**CR 2125940**
539,75	*584,20*	*22,23*			
21.500	23.500	1.000	HDSA1	RD	**CR 594356**
546,10	*596,90*	*25,40*			
22.000	23.500	0.875	HDSA1	RD	**CR 2200920**
558,80	*596,90*	*22,23*			
23.000	24.500	0.875	HDSB1	RD	**CR 2300921**
584,20	*622,30*	*22,23*			
24.000	26.250	0.875	HDSA2	RD	**CR 2400962**
609,60	*666,75*	*22,23*			
24.250	26.250	0.875	HDSA1	VD	**CR 2425950**
615,95	*666,75*	*22,23*			
25.000	27.500	1.000	HDSB1	RD	**CR 2500971**
	698,50	*25,40*			
32.000	34.000	0.875	HDSA2	DD	**CR 3200958**
812,80	*863,60*	*22,23*			
45.000	46.627	1.000	HDSB2	RD	**CR 4500930**
1 143,00	*1 184,33*	*25,40*			
46.840	48.000	1.188	HDSA2	RD	**CR 4684912**
1 189,74	*1 219,20*	*30,18*			

Please note that the product table only lists a selection of available sizes. These seals are made to order to fit any size request within the ranges stated in **table 8** on **page 30**

Radial shaft seals – HDSE1 – metric dimensions

d_1 **850** mm

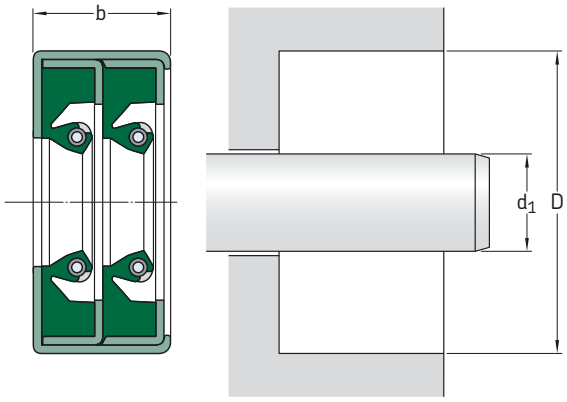

Please see **page 24–25** for housing bore requirements

Dimensions shaft d_1	bore D	nominal seal width b	**Design**	**Lip material**	**Designation**
mm			–	–	–
850,00	910,00	50,00	HDSE1	RR	**CR 3346961**

Please note that the product table only lists a selection of available sizes. These seals are made to order to fit any size request within the ranges stated in **table 8** on **page 30**

Radial shaft seals – HDSD1-2, HDSE1-2 – inch dimensions

d_1 **18.000 – 63.130** in

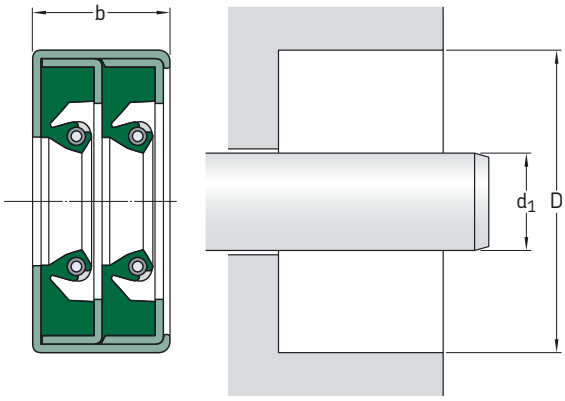

Please see **page 24–25** for housing bore requirements

Dimensions			Design	Lip material	Designation
shaft	bore	nominal seal width			
d_1	D	b			
in/*mm*			–	–	–
18.000	20.000	1.250	HDSD2	RR	**CR 1800570**
457,20	*508,00*	*31,75*			
	20.000	1.500	HDSD1	RR	**CR 1800956**
	508,00	*38,10*			
	20.250	1.250	HDSE2	RR	**CR 1800966**
	514,35	*31,75*			
18.500	20.000	1.250	HDSD2	RR	**CR 1850922**
469,90	*508,00*	*31,75*			
19.125	21.250	1.750	HDSD1	RR	**CR 1913960**
485,78	*539,75*	*44,45*			
20.000	22.000	1.813	HDSE1	RR	**CR 2000951**
508,00	*558,80*	*46,05*			
21.750	24.750	1.500	HDSD1	RR	**CR 2175920**
552,45	*628,65*	*38,10*			
	24.750	1.500	HDSD2	VV	**CR 2175992**
	628,65	*38,10*			
	24.750	1.500	HDSD1	VV	**CR 2175997**
	628,65	*38,10*			
	24.750	1.500	HDSE1	VV	**CR 2175998**
	628,65	*38,10*			
22.000	24.000	1.250	HDSD1	RR	**CR 2200953**
558,80	*609,60*	*31,75*			
	24.000	1.250	HDSE2	DD	**CR 2200958**
	609,60	*31,75*			
	24.000	1.250	HDSD2	DD	**CR 2200962**
	609,60	*31,75*			
23.000	24.750	1.250	HDSE1	VV	**CR 2300983**
584,20	*628,65*	*31,75*			
23.500	25.500	1.250	HDSD2	RR	**CR 2350955**
596,90	*647,70*	*31,75*			
25.500	28.500	1.250	HDSD2	RR	**CR 2550912**
647,70	*723,90*	*31,75*			
27.000	29.000	1.875	HDSE2	DD	**CR 2700953**
685,80	*736,60*	*47,63*			
27.688	29.812	1.250	HDSE2	RR	**CR 2769915**
703,28	*757,23*	*31,75*			
28.000	31.000	1.250	HDSD2	DD	**CR 2800998**
711,20	*787,40*	*31,75*			

Dimensions			Design	Lip material	Designation
shaft	bore	nominal seal width			
d_1	D	b			
in/*mm*			–	–	–
29.000	31.000	1.750	HDSD1	RR	**CR 2900954**
736,60	*787,40*	*44,45*			
31.000	34.000	1.250	HDSD2	RR	**CR 3100992**
787,40	*863,60*	*31,75*			
33.000	34.500	1.250	HDSD1	RR	**CR 3300920**
838,20	*876,30*	*31,75*			
	34.500	1.250	HDSE1	RR	**CR 3300921**
	876,30	*31,75*			
33.500	35.500	1.750	HDSE1	RR	**CR 3350950**
850,90	*901,70*	*44,45*			
35.500	38.000	1.250	HDSE2	VV	**CR 3550974**
901,70	*965,20*	*31,75*			
36.000	38.000	1.500	HDSE2	RR	**CR 3600954**
914,40	*965,20*	*38,10*			
38.000	40.000	1.312	HDSE1	RR	**CR 3800950**
965,20	*1 016,00*	*33,33*			
63.130	64.625	1.375	HDSD1	RD	**CR 6313922**
1 603,51	*1 641,48*	*34,93*			

Please note that the product table only lists a selection of available sizes. These seals are made to order to fit any size request within the ranges stated in **table 8** on **page 30**

Radial shaft seals – SBF – metric dimensions

d_1 **175 – 900** mm

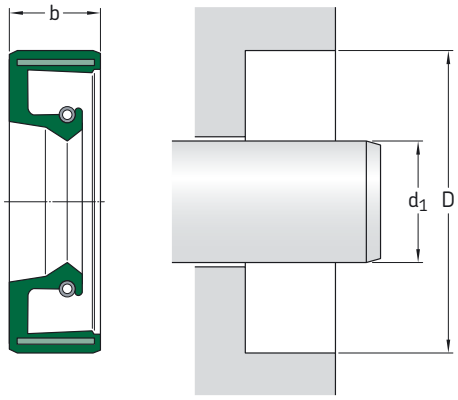

Please see **page 24–25** for housing bore requirements

Dimensions shaft d_1	bore D	nominal seal width b	Lip material	Designation
mm			–	–
175	205	15	R	**CR 175×205×15 SBF R**
			V	**CR 175×205×15 SBF V**
230	260	15	R	**CR 230×260×15 SBF R**
			V	**CR 230×260×15 SBF V**
240	270	15	R	**CR 240×270×15 SBF R**
			V	**CR 240×270×15 SBF V**
	280	16	R	**CR 240×280×16 SBF R**
			V	**CR 240×280×16 SBF V**
245	275	16	R	**CR 245×275×16 SBF R**
			V	**CR 245×275×16 SBF V**
260	290	16	R	**CR 260×290×16 SBF R**
			V	**CR 260×290×16 SBF V**
	310	16	R	**CR 260×310×16 SBF R**
			V	**CR 260×310×16 SBF V**
270	235	16	R	**CR 270×235×16 SBF R**
			V	**CR 270×235×16 SBF V**
290	330	18	R	**CR 290×330×18 SBF R**
			V	**CR 290×330×18 SBF V**
	334	20	R	**CR 290×334×20 SBF R**
			V	**CR 290×334×20 SBF V**
300	344	20	R	**CR 300×344×20 SBF R**
			V	**CR 300×344×20 SBF V**
316	360	20	R	**CR 316×360×20 SBF R**
			V	**CR 316×360×20 SBF V**
325	365	16	R	**CR 325×365×16 SBF R**
			V	**CR 325×365×16 SBF V**
340	380	20	R	**CR 340×380×20 SBF R**
			V	**CR 340×380×20 SBF V**
360	400	20	R	**CR 360×400×20 SBF R**
			V	**CR 360×400×20 SBF V**
385	430	25	R	**CR 385×430×25 SBF R**
			V	**CR 385×430×25 SBF V**
390	430	20	R	**CR 390×430×20 SBF R**
			V	**CR 390×430×20 SBF V**
400	440	20	R	**CR 400×440×20 SBF R**
			V	**CR 400×440×20 SBF V**
430	480	22	R	**CR 430×480×22 SBF R**
			V	**CR 430×480×22 SBF V**
440	490	25	R	**CR 440×490×25 SBF R**
			V	**CR 440×490×25 SBF V**
450	500	25	R	**CR 450×500×25 SBF R**
			V	**CR 450×500×25 SBF V**
900	960	27	R	**CR 900×960×27 SBF R**
			V	**CR 900×960×27 SBF V**

Please note that the product table only lists a selection of available sizes. Contact your SKF sales representative for complete information on availability

Radial shaft seals – SBF – inch dimensions

d_1 **11.000 – 27.500** in

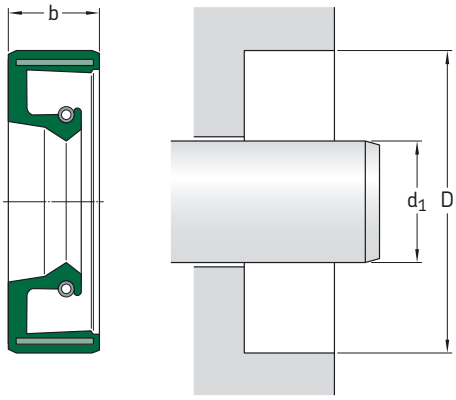

Please see **page 24–25** for housing bore requirements

Dimensions			**Designation**	
shaft	bore	nominal seal width	lip material	
d_1	D	b	R	V
in/*mm*			–	
11.000 *279,4*	12.500 *317,5*	0.625 *15,88*	**CR SBF 5809 R**	**CR SBF 5809 V**
20.500 *520,7*	22.500 *571,5*	0.875 *22,23*	**CR SBF 7083 R**	**CR SBF 7083 V**
21.500 *546,1*	23.469 *596,11*	0.875 *22,23*	**CR SBF 7175 R**	**CR SBF 7175 V**
23.000 *584,2*	24.500 *622,3*	0.750 *19,05*	**CR SBF 7270 R**	**CR SBF 7270 V**
27.500 *698,5*	29.500 *749,3*	1.000 *25,4*	**CR SBF 7406 R**	**CR SBF 7406 V**

Please note that the product table only lists a selection of available sizes. Contact your SKF sales representative for complete information on availability

Radial shaft seals – HSF1 (split), HSF5 (solid) – metric dimensions

d_1 **40 – 210** mm

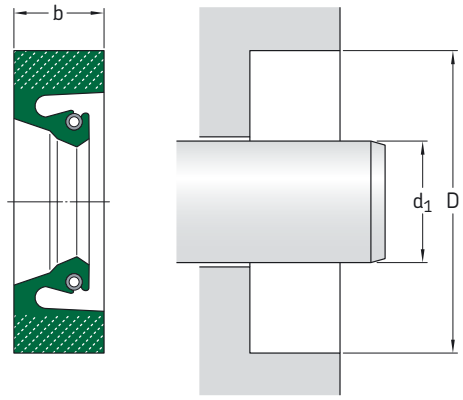

Please see **page 24–25** for housing bore requirements

Dimensions			Designation	
shaft	bore	nominal seal width	split version (HSF1) lip material R, V	solid version (HSF5) lip material R, V
d_1	D	b		
mm			–	
40	60	10	**CR 40×60×10 HSF1 R** **CR 40×60×10 HSF1 V**	**CR 40×60×10 HSF5 R** **CR 40×60×10 HSF5 V**
55	80	12,2	**CR 55×80×12.2 HSF1 R** **CR 55×80×12.2 HSF1 V**	**CR 55×80×12.2 HSF5 R** **CR 55×80×12.2 HSF5 V**
60	80	10	**CR 60×80×10 HSF1 R** **CR 60×80×10 HSF1 V**	**CR 60×80×10 HSF5 R** **CR 60×80×10 HSF5 V**
70	102	12,5	**CR 70×102×12.5 HSF1 R** **CR 70×102×12.5 HSF1 V**	**CR 70×102×12.5 HSF5 R** **CR 70×102×12.5 HSF5 V**
80	100	8	**CR 80×100×8 HSF1 R** **CR 80×100×8 HSF1 V**	**CR 80×100×8 HSF5 R** **CR 80×100×8 HSF5 V**
	112	12,5	**CR 80×112×12.5 HSF1 R** **CR 80×112×12.5 HSF1 V**	**CR 80×112×12.5 HSF5 R** **CR 80×112×12.5 HSF5 V**
84	100	8	**CR 84×100×8 HSF1 R** **CR 84×100×8 HSF1 V**	**CR 84×100×8 HSF5 R** **CR 84×100×8 HSF5 V**
85	101	8	**CR 85×101×8 HSF1 R** **CR 85×101×8 HSF1 V**	**CR 85×101×8 HSF5 R** **CR 85×101×8 HSF5 V**
	120	12	**CR 85×120×12 HSF1 R** **CR 85×120×12 HSF1 V**	**CR 85×120×12 HSF5 R** **CR 85×120×12 HSF5 V**
90	110	12	**CR 90×110×12 HSF1 R** **CR 90×110×12 HSF1 V**	**CR 90×110×12 HSF5 R** **CR 90×110×12 HSF5 V**
100	116	8	**CR 100×116×8 HSF1 R** **CR 100×116×8 HSF1 V**	**CR 100×116×8 HSF5 R** **CR 100×116×8 HSF5 V**
	130	10	**CR 100×130×10 HSF1 R** **CR 100×130×10 HSF1 V**	**CR 100×130×10 HSF5 R** **CR 100×130×10 HSF5 V**
110	130	12	**CR 110×130×12 HSF1 R** **CR 110×130×12 HSF1 V**	**CR 110×130×12 HSF5 R** **CR 110×130×12 HSF5 V**
120	150	13	**CR 120×150×13 HSF1 R** **CR 120×150×13 HSF1 V**	**CR 120×150×13 HSF5 R** **CR 120×150×13 HSF5 V**
125	155	12,5	**CR 125×155×12.5 HSF1 R** **CR 125×155×12.5 HSF1 V**	**CR 125×155×12.5 HSF5 R** **CR 125×155×12.5 HSF5 V**
	160	12	**CR 125×160×12 HSF1 R** **CR 125×160×12 HSF1 V**	**CR 125×160×12 HSF5 R** **CR 125×160×12 HSF5 V**
127	165	16	**CR 127×165×16 HSF1 R** **CR 127×165×16 HSF1 V**	**CR 127×165×16 HSF5 R** **CR 127×165×16 HSF5 V**
135	160	12	**CR 135×160×12 HSF1 R** **CR 135×160×12 HSF1 V**	**CR 135×160×12 HSF5 R** **CR 135×160×12 HSF5 V**

Please note that the product table only lists a selection of available sizes. Contact your SKF sales representative for complete information on availability

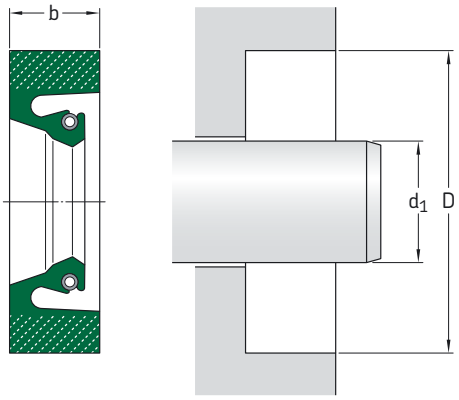

Please see **page 24–25** for housing bore requirements

Dimensions			Designation	
shaft	bore	nominal seal width	split version (HSF1) lip material R, V	solid version (HSF5) lip material R, V
d_1	D	b		
mm			–	
140	170	12	**CR 140×170×12 HSF1 R**	**CR 140×170×12 HSF5 R**
			CR 140×170×12 HSF1 V	**CR 140×170×12 HSF5 V**
145	180	14	**CR 145×180×14 HSF1 R**	**CR 145×180×14 HSF5 R**
			CR 145×180×14 HSF1 V	**CR 145×180×14 HSF5 V**
150	180	12	**CR 150×180×12 HSF1 R**	**CR 150×180×12 HSF5 R**
			CR 150×180×12 HSF1 V	**CR 150×180×12 HSF5 V**
160	190	15	**CR 160×190×15 HSF1 R**	**CR 160×190×15 HSF5 R**
			CR 160×190×15 HSF1 V	**CR 160×190×15 HSF5 V**
	200	10	**CR 160×200×10 HSF1 R**	**CR 160×200×10 HSF5 R**
			CR 160×200×10 HSF1 V	**CR 160×200×10 HSF5 V**
170	200	12	**CR 170×200×12 HSF1 R**	**CR 170×200×12 HSF5 R**
			CR 170×200×12 HSF1 V	**CR 170×200×12 HSF5 V**
170	200	16	**CR 170×200×16 HSF1 R**	**CR 170×200×16 HSF5 R**
			CR 170×200×16 HSF1 V	**CR 170×200×16 HSF5 V**
	211	16	**CR 170×211×16 HSF1 R**	**CR 170×211×16 HSF5 R**
			CR 170×211×16 HSF1 V	**CR 170×211×16 HSF5 V**
175	200	15	**CR 175×200×15 HSF1 R**	**CR 175×200×15 HSF5 R**
			CR 175×200×15 HSF1 V	**CR 175×200×15 HSF5 V**
180	200	15	**CR 180×200×15 HSF1 R**	**CR 180×200×15 HSF5 R**
			CR 180×200×15 HSF1 V	**CR 180×200×15 HSF5 V**
	222	16	**CR 180×222×16 HSF1 R**	**CR 180×222×16 HSF5 R**
			CR 180×222×16 HSF1 V	**CR 180×222×16 HSF5 V**
185	225	16	**CR 185×225×16 HSF1 R**	**CR 185×225×16 HSF5 R**
			CR 185×225×16 HSF1 V	**CR 185×225×16 HSF5 V**
190	150	16	**CR 190×150×16 HSF1 R**	**CR 190×150×16 HSF5 R**
			CR 190×150×16 HSF1 V	**CR 190×150×16 HSF5 V**
	225	18	**CR 190×225×18 HSF1 R**	**CR 190×225×18 HSF5 R**
			CR 190×225×18 HSF1 V	**CR 190×225×18 HSF5 V**
	230	16	**CR 190×230×16 HSF1 R**	**CR 190×230×16 HSF5 R**
			CR 190×230×16 HSF1 V	**CR 190×230×16 HSF5 V**
200	240	16	**CR 200×240×16 HSF1 R**	**CR 200×240×16 HSF5 R**
			CR 200×240×16 HSF1 V	**CR 200×240×16 HSF5 V**
	250	18	**CR 200×250×18 HSF1 R**	**CR 200×250×18 HSF5 R**
			CR 200×250×18 HSF1 V	**CR 200×250×18 HSF5 V**
210	240	12	**CR 210×240×12 HSF1 R**	**CR 210×240×12 HSF5 R**
			CR 210×240×12 HSF1 V	**CR 210×240×12 HSF5 V**
	250	16	**CR 210×250×16 HSF1 R**	**CR 210×250×16 HSF5 R**
			CR 210×250×16 HSF1 V	**CR 210×250×16 HSF5 V**

Please note that the product table only lists a selection of available sizes. Contact your SKF sales representative for complete information on availability

Radial shaft seals – HSF1 (split), HSF5 (solid) – metric dimensions

d_1 **215 – 316** mm

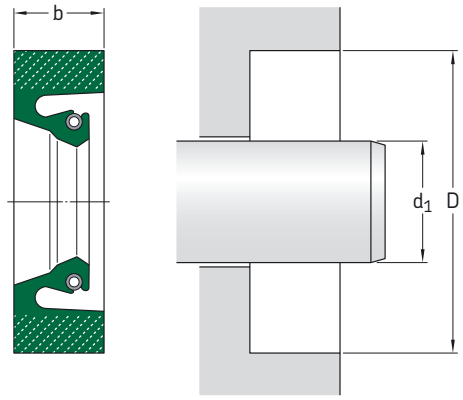

Please see **page 24–25** for housing bore requirements

Dimensions			Designation	
shaft	bore	nominal seal width	split version (HSF1) lip material R, V	solid version (HSF5) lip material R, V
d_1	D	b		
mm			–	
215	248	15	**CR 215×248×15 HSF1 R**	**CR 215×248×15 HSF5 R**
			CR 215×248×15 HSF1 V	**CR 215×248×15 HSF5 V**
	250	16	**CR 215×250×16 HSF1 R**	**CR 215×250×16 HSF5 R**
			CR 215×250×16 HSF1 V	**CR 215×250×16 HSF5 V**
220	180	16	**CR 220×180×16 HSF1 R**	**CR 220×180×16 HSF5 R**
			CR 220×180×16 HSF1 V	**CR 220×180×16 HSF5 V**
	260	16	**CR 220×260×16 HSF1 R**	**CR 220×260×16 HSF5 R**
			CR 220×260×16 HSF1 V	**CR 220×260×16 HSF5 V**
226	276	22,22	**CR 226×276×22.22 HSF1 R**	**CR 226×276×22.22 HSF5 R**
			CR 226×276×22.22 HSF1 V	**CR 226×276×22.22 HSF5 V**
230	260	15	**CR 230×260×15 HSF1 R**	**CR 230×260×15 HSF5 R**
			CR 230×260×15 HSF1 V	**CR 230×260×15 HSF5 V**
	270	16	**CR 230×270×16 HSF1 R**	**CR 230×270×16 HSF5 R**
			CR 230×270×16 HSF1 V	**CR 230×270×16 HSF5 V**
235	265	15	**CR 235×265×15 HSF1 R**	**CR 235×265×15 HSF5 R**
			CR 235×265×15 HSF1 V	**CR 235×265×15 HSF5 V**
	275	20	**CR 235×275×20 HSF1 R**	**CR 235×275×20 HSF5 R**
			CR 235×275×20 HSF1 V	**CR 235×275×20 HSF5 V**
236	276	16	**CR 236×276×16 HSF1 R**	**CR 236×276×16 HSF5 R**
			CR 236×276×16 HSF1 V	**CR 236×276×16 HSF5 V**
240	275	18	**CR 240×275×18 HSF1 R**	**CR 240×275×18 HSF5 R**
			CR 240×275×18 HSF1 V	**CR 240×275×18 HSF5 V**
	280	18	**CR 240×280×18 HSF1 R**	**CR 240×280×18 HSF5 R**
			CR 240×280×18 HSF1 V	**CR 240×280×18 HSF5 V**
	290	25	**CR 240×290×25 HSF1 R**	**CR 240×290×25 HSF5 R**
			CR 240×290×25 HSF1 V	**CR 240×290×25 HSF5 V**
250	280	15	**CR 250×280×15 HSF1 R**	**CR 250×280×15 HSF5 R**
			CR 250×280×15 HSF1 V	**CR 250×280×15 HSF5 V**
	290	16,5	**CR 250×290×16.5 HSF1 R**	**CR 250×290×16.5 HSF5 R**
			CR 250×290×16.5 HSF1 V	**CR 250×290×16.5 HSF5 V**
260	290	16	**CR 260×290×16 HSF1 R**	**CR 260×290×16 HSF5 R**
			CR 260×290×16 HSF1 V	**CR 260×290×16 HSF5 V**
	304	20	**CR 260×304×20 HSF1 R**	**CR 260×304×20 HSF5 R**
			CR 260×304×20 HSF1 V	**CR 260×304×20 HSF5 V**
270	310	15	**CR 270×310×15 HSF1 R**	**CR 270×310×15 HSF5 R**
			CR 270×310×15 HSF1 V	**CR 270×310×15 HSF5 V**
	314	20	**CR 270×314×20 HSF1 R**	**CR 270×314×20 HSF5 R**
			CR 270×314×20 HSF1 V	**CR 270×314×20 HSF5 V**

Please note that the product table only lists a selection of available sizes. Contact your SKF sales representative for complete information on availability

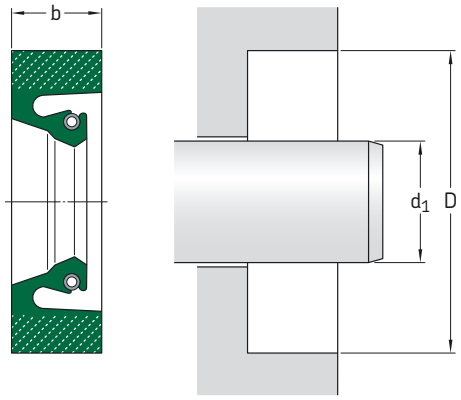

Please see **page 24–25** for housing bore requirements

Dimensions			Designation	
shaft	bore	nominal seal width	split version (HSF1) lip material R, V	solid version (HSF5) lip material R, V
d_1	D	b		
mm			–	
275	315	20	**CR 275×315×20 HSF1 R**	**CR 275×315×20 HSF5 R**
			CR 275×315×20 HSF1 V	**CR 275×315×20 HSF5 V**
280	320	16	**CR 280×320×16 HSF1 R**	**CR 280×320×16 HSF5 R**
			CR 280×320×16 HSF1 V	**CR 280×320×16 HSF5 V**
	320	20	**CR 280×320×20 HSF1 R**	**CR 280×320×20 HSF5 R**
			CR 280×320×20 HSF1 V	**CR 280×320×20 HSF5 V**
	324	20	**CR 280×324×20 HSF1 R**	**CR 280×324×20 HSF5 R**
			CR 280×324×20 HSF1 V	**CR 280×324×20 HSF5 V**
285	310	15	**CR 285×310×15 HSF1 R**	**CR 285×310×15 HSF5 R**
			CR 285×310×15 HSF1 V	**CR 285×310×15 HSF5 V**
289	327	19	**CR 289×327×19 HSF1 R**	**CR 289×327×19 HSF5 R**
			CR 289×327×19 HSF1 V	**CR 289×327×19 HSF5 V**
290	330	20	**CR 290×330×20 HSF1 R**	**CR 290×330×20 HSF5 R**
			CR 290×330×20 HSF1 V	**CR 290×330×20 HSF5 V**
	334	20	**CR 290×334×20 HSF1 R**	**CR 290×334×20 HSF5 R**
			CR 290×334×20 HSF1 V	**CR 290×334×20 HSF5 V**
292	330	15,87	**CR 292×330×15.87 HSF1 R**	**CR 292×330×15.87 HSF5 R**
			CR 292×330×15.87 HSF1 V	**CR 292×330×15.87 HSF5 V**
300	340	16,5	**CR 300×340×16.5 HSF1 R**	**CR 300×340×16.5 HSF5 R**
			CR 300×340×16.5 HSF1 V	**CR 300×340×16.5 HSF5 V**
	340	20	**CR 300×340×20 HSF1 R**	**CR 300×340×20 HSF5 R**
			CR 300×340×20 HSF1 V	**CR 300×340×20 HSF5 V**
304	348	20	**CR 304×348×20 HSF1 R**	**CR 304×348×20 HSF5 R**
			CR 304×348×20 HSF1 V	**CR 304×348×20 HSF5 V**
308	352	20	**CR 308×352×20 HSF1 R**	**CR 308×352×20 HSF5 R**
			CR 308×352×20 HSF1 V	**CR 308×352×20 HSF5 V**
310	345	18	**CR 310×345×18 HSF1 R**	**CR 310×345×18 HSF5 R**
			CR 310×345×18 HSF1 V	**CR 310×345×18 HSF5 V**
	354	20,5	**CR 310×354×20.5 HSF1 R**	**CR 310×354×20.5 HSF5 R**
			CR 310×354×20.5 HSF1 V	**CR 310×354×20.5 HSF5 V**
311	345	18,3	**CR 311×345×18.3 HSF1 R**	**CR 311×345×18.3 HSF5 R**
			CR 311×345×18.3 HSF1 V	**CR 311×345×18.3 HSF5 V**
314	355	20	**CR 314×355×20 HSF1 R**	**CR 314×355×20 HSF5 R**
			CR 314×355×20 HSF1 V	**CR 314×355×20 HSF5 V**
316	360	20	**CR 316×360×20 HSF1 R**	**CR 316×360×20 HSF5 R**
			CR 316×360×20 HSF1 V	**CR 316×360×20 HSF5 V**

Please note that the product table only lists a selection of available sizes. Contact your SKF sales representative for complete information on availability

Radial shaft seals – HSF1 (split), HSF5 (solid) – metric dimensions

d_1 **320 – 470** mm

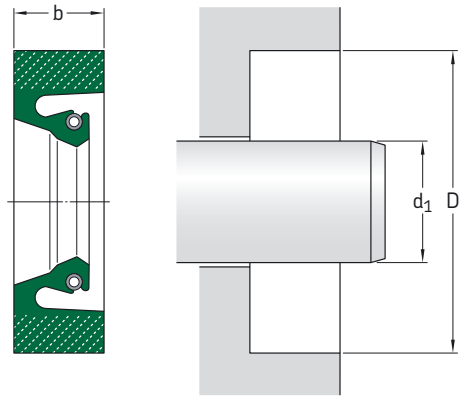

Please see **page 24–25** for housing bore requirements

Dimensions			Designation	
shaft	bore	nominal seal width	split version (HSF1) lip material R, V	solid version (HSF5) lip material R, V
d_1	D	b		
mm			–	
320	350	15	**CR 320×350×15 HSF1 R**	**CR 320×350×15 HSF5 R**
			CR 320×350×15 HSF1 V	**CR 320×350×15 HSF5 V**
	360	18	**CR 320×360×18 HSF1 R**	**CR 320×360×18 HSF5 R**
			CR 320×360×18 HSF1 V	**CR 320×360×18 HSF5 V**
328	372	20,2	**CR 328×372×20.2 HSF1 R**	**CR 328×372×20.2 HSF5 R**
			CR 328×372×20.2 HSF1 V	**CR 328×372×20.2 HSF5 V**
330	370	18	**CR 330×370×18 HSF1 R**	**CR 330×370×18 HSF5 R**
			CR 330×370×18 HSF1 V	**CR 330×370×18 HSF5 V**
	374	20	**CR 330×374×20 HSF1 R**	**CR 330×374×20 HSF5 R**
			CR 330×374×20 HSF1 V	**CR 330×374×20 HSF5 V**
335	373	19	**CR 335×373×19 HSF1 R**	**CR 335×373×19 HSF5 R**
			CR 335×373×19 HSF1 V	**CR 335×373×19 HSF5 V**
340	380	16	**CR 340×380×16 HSF1 R**	**CR 340×380×16 HSF5 R**
			CR 340×380×16 HSF1 V	**CR 340×380×16 HSF5 V**
	380	20	**CR 340×380×20 HSF1 R**	**CR 340×380×20 HSF5 R**
			CR 340×380×20 HSF1 V	**CR 340×380×20 HSF5 V**
350	380	17,7	**CR 350×380×17.7 HSF1 R**	**CR 350×380×17.7 HSF5 R**
			CR 350×380×17.7 HSF1 V	**CR 350×380×17.7 HSF5 V**
	394	20	**CR 350×394×20 HSF1 R**	**CR 350×394×20 HSF5 R**
			CR 350×394×20 HSF1 V	**CR 350×394×20 HSF5 V**
360	404	20	**CR 360×404×20 HSF1 R**	**CR 360×404×20 HSF5 R**
			CR 360×404×20 HSF1 V	**CR 360×404×20 HSF5 V**
	410	20	**CR 360×410×20 HSF1 R**	**CR 360×410×20 HSF5 R**
			CR 360×410×20 HSF1 V	**CR 360×410×20 HSF5 V**
362	400	20	**CR 362×400×20 HSF1 R**	**CR 362×400×20 HSF5 R**
			CR 362×400×20 HSF1 V	**CR 362×400×20 HSF5 V**
	406	22	**CR 362×406×22 HSF1 R**	**CR 362×406×22 HSF5 R**
			CR 362×406×22 HSF1 V	**CR 362×406×22 HSF5 V**
370	410	20	**CR 370×410×20 HSF1 R**	**CR 370×410×20 HSF5 R**
			CR 370×410×20 HSF1 V	**CR 370×410×20 HSF5 V**
	414	20	**CR 370×414×20 HSF1 R**	**CR 370×414×20 HSF5 R**
			CR 370×414×20 HSF1 V	**CR 370×414×20 HSF5 V**
380	420	20	**CR 380×420×20 HSF1 R**	**CR 380×420×20 HSF5 R**
			CR 380×420×20 HSF1 V	**CR 380×420×20 HSF5 V**
387	431	22,5	**CR 387×431×22.5 HSF1 R**	**CR 387×431×22.5 HSF5 R**
			CR 387×431×22.5 HSF1 V	**CR 387×431×22.5 HSF5 V**
	438	25,4	**CR 387×438×25.4 HSF1 R**	**CR 387×438×25.4 HSF5 R**
			CR 387×438×25.4 HSF1 V	**CR 387×438×25.4 HSF5 V**

Please note that the product table only lists a selection of available sizes. Contact your SKF sales representative for complete information on availability

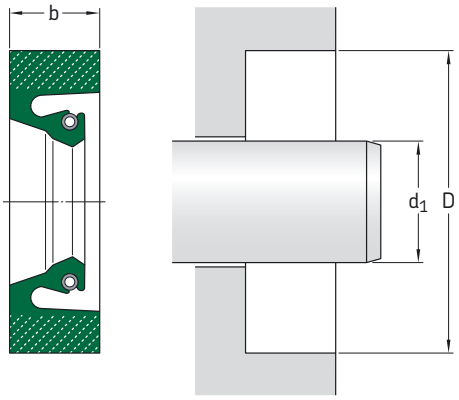

Please see **page 24–25** for housing bore requirements

Dimensions			Designation	
shaft	bore	nominal seal width	split version (HSF1) lip material R, V	solid version (HSF5) lip material R, V
d_1	D	b		
mm			–	
390	430	20	**CR 390×430×20 HSF1 R** **CR 390×430×20 HSF1 V**	**CR 390×430×20 HSF5 R** **CR 390×430×20 HSF5 V**
395	439	20	**CR 395×439×20 HSF1 R** **CR 395×439×20 HSF1 V**	**CR 395×439×20 HSF5 R** **CR 395×439×20 HSF5 V**
	439	20,5	**CR 395×439×20.5 HSF1 R** **CR 395×439×20.5 HSF1 V**	**CR 395×439×20.5 HSF5 R** **CR 395×439×20.5 HSF5 V**
400	440	20	**CR 400×440×20 HSF1 R** **CR 400×440×20 HSF1 V**	**CR 400×440×20 HSF5 R** **CR 400×440×20 HSF5 V**
	450	22	**CR 400×450×22 HSF1 R** **CR 400×450×22 HSF1 V**	**CR 400×450×22 HSF5 R** **CR 400×450×22 HSF5 V**
420	460	20	**CR 420×460×20 HSF1 R** **CR 420×460×20 HSF1 V**	**CR 420×460×20 HSF5 R** **CR 420×460×20 HSF5 V**
	470	25	**CR 420×470×25 HSF1 R** **CR 420×470×25 HSF1 V**	**CR 420×470×25 HSF5 R** **CR 420×470×25 HSF5 V**
430	480	25	**CR 430×480×25 HSF1 R** **CR 430×480×25 HSF1 V**	**CR 430×480×25 HSF5 R** **CR 430×480×25 HSF5 V**
435	485	22	**CR 435×485×22 HSF1 R** **CR 435×485×22 HSF1 V**	**CR 435×485×22 HSF5 R** **CR 435×485×22 HSF5 V**
438	476	24	**CR 438×476×24 HSF1 R** **CR 438×476×24 HSF1 V**	**CR 438×476×24 HSF5 R** **CR 438×476×24 HSF5 V**
440	480	20	**CR 440×480×20 HSF1 R** **CR 440×480×20 HSF1 V**	**CR 440×480×20 HSF5 R** **CR 440×480×20 HSF5 V**
	490	20	**CR 440×490×20 HSF1 R** **CR 440×490×20 HSF1 V**	**CR 440×490×20 HSF5 R** **CR 440×490×20 HSF5 V**
446	486	16,5	**CR 446×486×16.5 HSF1 R** **CR 446×486×16.5 HSF1 V**	**CR 446×486×16.5 HSF5 R** **CR 446×486×16.5 HSF5 V**
450	490	18	**CR 450×490×18 HSF1 R** **CR 450×490×18 HSF1 V**	**CR 450×490×18 HSF5 R** **CR 450×490×18 HSF5 V**
	500	22	**CR 450×500×22 HSF1 R** **CR 450×500×22 HSF1 V**	**CR 450×500×22 HSF5 R** **CR 450×500×22 HSF5 V**
460	510	22	**CR 460×510×22 HSF1 R** **CR 460×510×22 HSF1 V**	**CR 460×510×22 HSF5 R** **CR 460×510×22 HSF5 V**
	510	25	**CR 460×510×25 HSF1 R** **CR 460×510×25 HSF1 V**	**CR 460×510×25 HSF5 R** **CR 460×510×25 HSF5 V**
470	520	25	**CR 470×520×25 HSF1 R** **CR 470×520×25 HSF1 V**	**CR 470×520×25 HSF5 R** **CR 470×520×25 HSF5 V**

Please note that the product table only lists a selection of available sizes. Contact your SKF sales representative for complete information on availability

Radial shaft seals – HSF1 (split), HSF5 (solid) – metric dimensions

d_1 **480 – 736** mm

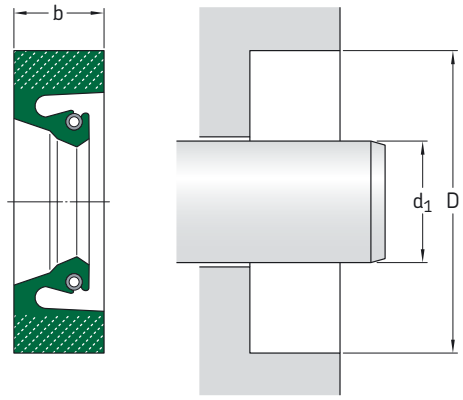

Please see **page 24–25** for housing bore requirements

Dimensions			**Designation**	
shaft	bore	nominal seal width	split version (HSF1) lip material R, V	solid version (HSF5) lip material R, V
d_1	D	b		
mm			–	
480	520	18	**CR 480×520×18 HSF1 R**	**CR 480×520×18 HSF5 R**
			CR 480×520×18 HSF1 V	**CR 480×520×18 HSF5 V**
	530	22	**CR 480×530×22 HSF1 R**	**CR 480×530×22 HSF5 R**
			CR 480×530×22 HSF1 V	**CR 480×530×22 HSF5 V**
	550	25	**CR 480×550×25 HSF1 R**	**CR 480×550×25 HSF5 R**
			CR 480×550×25 HSF1 V	**CR 480×550×25 HSF5 V**
495	545	22	**CR 495×545×22 HSF1 R**	**CR 495×545×22 HSF5 R**
			CR 495×545×22 HSF1 V	**CR 495×545×22 HSF5 V**
500	540	10	**CR 500×540×10 HSF1 R**	**CR 500×540×10 HSF5 R**
			CR 500×540×10 HSF1 V	**CR 500×540×10 HSF5 V**
	550	20	**CR 500×550×20 HSF1 R**	**CR 500×550×20 HSF5 R**
			CR 500×550×20 HSF1 V	**CR 500×550×20 HSF5 V**
520	560	18	**CR 520×560×18 HSF1 R**	**CR 520×560×18 HSF5 R**
			CR 520×560×18 HSF1 V	**CR 520×560×18 HSF5 V**
	560	20	**CR 520×560×20 HSF1 R**	**CR 520×560×20 HSF5 R**
			CR 520×560×20 HSF1 V	**CR 520×560×20 HSF5 V**
525	575	22	**CR 525×575×22 HSF1 R**	**CR 525×575×22 HSF5 R**
			CR 525×575×22 HSF1 V	**CR 525×575×22 HSF5 V**
530	580	22	**CR 530×580×22 HSF1 R**	**CR 530×580×22 HSF5 R**
			CR 530×580×22 HSF1 V	**CR 530×580×22 HSF5 V**
	580	25	**CR 530×580×25 HSF1 R**	**CR 530×580×25 HSF5 R**
			CR 530×580×25 HSF1 V	**CR 530×580×25 HSF5 V**
535	585	22	**CR 535×585×22 HSF1 R**	**CR 535×585×22 HSF5 R**
			CR 535×585×22 HSF1 V	**CR 535×585×22 HSF5 V**
540	590	22	**CR 540×590×22 HSF1 R**	**CR 540×590×22 HSF5 R**
			CR 540×590×22 HSF1 V	**CR 540×590×22 HSF5 V**
	590	30	**CR 540×590×30 HSF1 R**	**CR 540×590×30 HSF5 R**
			CR 540×590×30 HSF1 V	**CR 540×590×30 HSF5 V**
550	600	22,3	**CR 550×600×22.3 HSF1 R**	**CR 550×600×22.3 HSF5 R**
			CR 550×600×22.3 HSF1 V	**CR 550×600×22.3 HSF5 V**
560	604	20	**CR 560×604×20 HSF1 R**	**CR 560×604×20 HSF5 R**
			CR 560×604×20 HSF1 V	**CR 560×604×20 HSF5 V**
	610	22,3	**CR 560×610×22.3 HSF1 R**	**CR 560×610×22.3 HSF5 R**
			CR 560×610×22.3 HSF1 V	**CR 560×610×22.3 HSF5 V**
570	616	19	**CR 570×616×19 HSF1 R**	**CR 570×616×19 HSF5 R**
			CR 570×616×19 HSF1 V	**CR 570×616×19 HSF5 V**
	620	25	**CR 570×620×25 HSF1 R**	**CR 570×620×25 HSF5 R**
			CR 570×620×25 HSF1 V	**CR 570×620×25 HSF5 V**

Please note that the product table only lists a selection of available sizes. Contact your SKF sales representative for complete information on availability

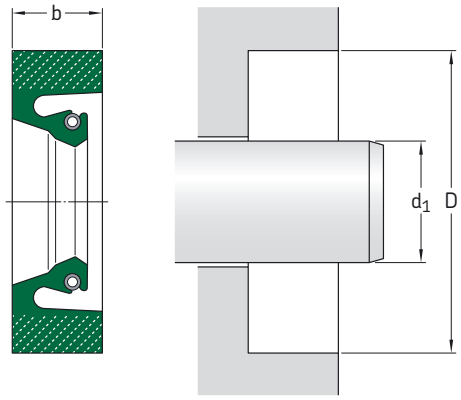

Please see **page 24–25** for housing bore requirements

Dimensions			Designation	
shaft	bore	nominal seal width	split version (HSF1) lip material R, V	solid version (HSF5) lip material R, V
d_1	D	b		
mm			–	
575	625	22	**CR 575×625×22 HSF1 R** **CR 575×625×22 HSF1 V**	**CR 575×625×22 HSF5 R** **CR 575×625×22 HSF5 V**
580	630	22	**CR 580×630×22 HSF1 R** **CR 580×630×22 HSF1 V**	**CR 580×630×22 HSF5 R** **CR 580×630×22 HSF5 V**
600	650	22	**CR 600×650×22 HSF1 R** **CR 600×650×22 HSF1 V**	**CR 600×650×22 HSF5 R** **CR 600×650×22 HSF5 V**
620	670	22	**CR 620×670×22 HSF1 R** **CR 620×670×22 HSF1 V**	**CR 620×670×22 HSF5 R** **CR 620×670×22 HSF5 V**
	684	25	**CR 620×684×25 HSF1 R** **CR 620×684×25 HSF1 V**	**CR 620×684×25 HSF5 R** **CR 620×684×25 HSF5 V**
625	689	25	**CR 625×689×25 HSF1 R** **CR 625×689×25 HSF1 V**	**CR 625×689×25 HSF5 R** **CR 625×689×25 HSF5 V**
630	690	30	**CR 630×690×30 HSF1 R** **CR 630×690×30 HSF1 V**	**CR 630×690×30 HSF5 R** **CR 630×690×30 HSF5 V**
635	705	30	**CR 635×705×30 HSF1 R** **CR 635×705×30 HSF1 V**	**CR 635×705×30 HSF5 R** **CR 635×705×30 HSF5 V**
650	690	18	**CR 650×690×18 HSF1 R** **CR 650×690×18 HSF1 V**	**CR 650×690×18 HSF5 R** **CR 650×690×18 HSF5 V**
660	724	25	**CR 660×724×25 HSF1 R** **CR 660×724×25 HSF1 V**	**CR 660×724×25 HSF5 R** **CR 660×724×25 HSF5 V**
670	734	25	**CR 670×734×25 HSF1 R** **CR 670×734×25 HSF1 V**	**CR 670×734×25 HSF5 R** **CR 670×734×25 HSF5 V**
685	749	25	**CR 685×749×25 HSF1 R** **CR 685×749×25 HSF1 V**	**CR 685×749×25 HSF5 R** **CR 685×749×25 HSF5 V**
700	760	30	**CR 700×760×30 HSF1 R** **CR 700×760×30 HSF1 V**	**CR 700×760×30 HSF5 R** **CR 700×760×30 HSF5 V**
710	770	30	**CR 710×770×30 HSF1 R** **CR 710×770×30 HSF1 V**	**CR 710×770×30 HSF5 R** **CR 710×770×30 HSF5 V**
	774	25	**CR 710×774×25 HSF1 R** **CR 710×774×25 HSF1 V**	**CR 710×774×25 HSF5 R** **CR 710×774×25 HSF5 V**
730	794	25	**CR 730×794×25 HSF1 R** **CR 730×794×25 HSF1 V**	**CR 730×794×25 HSF5 R** **CR 730×794×25 HSF5 V**
736	800	25	**CR 736×800×25 HSF1 R** **CR 736×800×25 HSF1 V**	**CR 736×800×25 HSF5 R** **CR 736×800×25 HSF5 V**

Please note that the product table only lists a selection of available sizes. Contact your SKF sales representative for complete information on availability

Radial shaft seals – HSF1 (split), HSF5 (solid) – metric dimensions

d_1 **740 – 1 110** mm

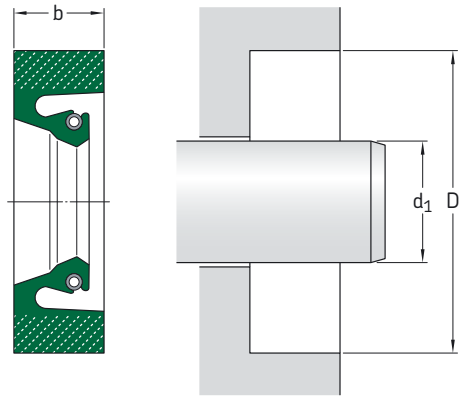

Please see **page 24–25** for housing bore requirements

Dimensions			Designation	
shaft	bore	nominal seal width	split version (HSF1) lip material R, V	solid version (HSF5) lip material R, V
d_1	D	b		
mm			–	
740	785	18	**CR 740×785×18 HSF1 R** **CR 740×785×18 HSF1 V**	**CR 740×785×18 HSF5 R** **CR 740×785×18 HSF5 V**
744	808	25	**CR 744×808×25 HSF1 R** **CR 744×808×25 HSF1 V**	**CR 744×808×25 HSF5 R** **CR 744×808×25 HSF5 V**
750	810	30	**CR 750×810×30 HSF1 R** **CR 750×810×30 HSF1 V**	**CR 750×810×30 HSF5 R** **CR 750×810×30 HSF5 V**
	814	25	**CR 750×814×25 HSF1 R** **CR 750×814×25 HSF1 V**	**CR 750×814×25 HSF5 R** **CR 750×814×25 HSF5 V**
760	820	30	**CR 760×820×30 HSF1 R** **CR 760×820×30 HSF1 V**	**CR 760×820×30 HSF5 R** **CR 760×820×30 HSF5 V**
770	834	25	**CR 770×834×25 HSF1 R** **CR 770×834×25 HSF1 V**	**CR 770×834×25 HSF5 R** **CR 770×834×25 HSF5 V**
780	844	25	**CR 780×844×25 HSF1 R** **CR 780×844×25 HSF1 V**	**CR 780×844×25 HSF5 R** **CR 780×844×25 HSF5 V**
790	850	30	**CR 790×850×30 HSF1 R** **CR 790×850×30 HSF1 V**	**CR 790×850×30 HSF5 R** **CR 790×850×30 HSF5 V**
800	860	30	**CR 800×860×30 HSF1 R** **CR 800×860×30 HSF1 V**	**CR 800×860×30 HSF5 R** **CR 800×860×30 HSF5 V**
	865	25	**CR 800×865×25 HSF1 R** **CR 800×865×25 HSF1 V**	**CR 800×865×25 HSF5 R** **CR 800×865×25 HSF5 V**
810	860	25	**CR 810×860×25 HSF1 R** **CR 810×860×25 HSF1 V**	**CR 810×860×25 HSF5 R** **CR 810×860×25 HSF5 V**
	874	22	**CR 810×874×22 HSF1 R** **CR 810×874×22 HSF1 V**	**CR 810×874×22 HSF5 R** **CR 810×874×22 HSF5 V**
840	904	25	**CR 840×904×25 HSF1 R** **CR 840×904×25 HSF1 V**	**CR 840×904×25 HSF5 R** **CR 840×904×25 HSF5 V**
850	900	22	**CR 850×900×22 HSF1 R** **CR 850×900×22 HSF1 V**	**CR 850×900×22 HSF5 R** **CR 850×900×22 HSF5 V**
	904	25	**CR 850×904×25 HSF1 R** **CR 850×904×25 HSF1 V**	**CR 850×904×25 HSF5 R** **CR 850×904×25 HSF5 V**
	910	30	**CR 850×910×30 HSF1 R** **CR 850×910×30 HSF1 V**	**CR 850×910×30 HSF5 R** **CR 850×910×30 HSF5 V**
900	960	30	**CR 900×960×30 HSF1 R** **CR 900×960×30 HSF1 V**	**CR 900×960×30 HSF5 R** **CR 900×960×30 HSF5 V**
	964	32	**CR 900×964×32 HSF1 R** **CR 900×964×32 HSF1 V**	**CR 900×964×32 HSF5 R** **CR 900×964×32 HSF5 V**

Please note that the product table only lists a selection of available sizes. Contact your SKF sales representative for complete information on availability

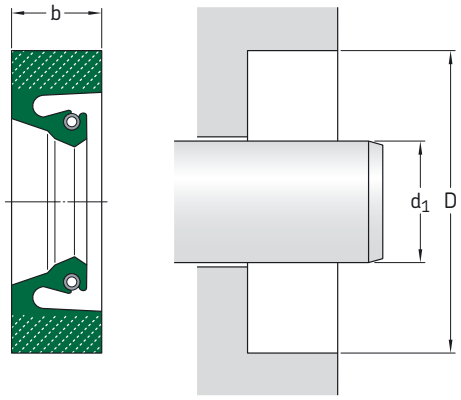

Please note that the product table only lists a selection of available sizes. Contact your SKF sales representative for complete information on availability.

Please see **page 24–25** for housing bore requirements

Dimensions			**Designation**	
shaft	bore	nominal seal width	split version (HSF1) lip material R, V	solid version (HSF5) lip material R, V
d_1	D	b		
mm			–	
910	974	25	**CR 910×974×25 HSF1 R** **CR 910×974×25 HSF1 V**	**CR 910×974×25 HSF5 R** **CR 910×974×25 HSF5 V**
	974	25,4	**CR 910×974×25.4 HSF1 R** **CR 910×974×25.4 HSF1 V**	**CR 910×974×25.4 HSF5 R** **CR 910×974×25.4 HSF5 V**
920	984	25	**CR 920×984×25 HSF1 R** **CR 920×984×25 HSF1 V**	**CR 920×984×25 HSF5 R** **CR 920×984×25 HSF5 V**
950	1 000	25	**CR 950×1000×25 HSF1 R** **CR 950×1000×25 HSF1 V**	**CR 950×1000×25 HSF5 R** **CR 950×1000×25 HSF5 V**
	1 010	30	**CR 950×1010×30 HSF1 R** **CR 950×1010×30 HSF1 V**	**CR 950×1010×30 HSF5 R** **CR 950×1010×30 HSF5 V**
960	1 024	25	**CR 960×1024×25 HSF1 R** **CR 960×1024×25 HSF1 V**	**CR 960×1024×25 HSF5 R** **CR 960×1024×25 HSF5 V**
970	1 020	25	**CR 970×1020×25 HSF1 R** **CR 970×1020×25 HSF1 V**	**CR 970×1020×25 HSF5 R** **CR 970×1020×25 HSF5 V**
	1 034	25	**CR 970×1034×25 HSF1 R** **CR 970×1034×25 HSF1 V**	**CR 970×1034×25 HSF5 R** **CR 970×1034×25 HSF5 V**
1 000	1 064	25	**CR 1000×1064×25 HSF1 R** **CR 1000×1064×25 HSF1 V**	**CR 1000×1064×25 HSF5 R** **CR 1000×1064×25 HSF5 V**
1 016	1 043,1	13,7	**CR 1016×1043.1×13.7 HSF1 R** **CR 1016×1043.1×13.7 HSF1 V**	**CR 1016×1043.1×13.7 HSF5 R** **CR 1016×1043.1×13.7 HSF5 V**
1 110	1 174	25	**CR 1110×1174×25 HSF1 R** **CR 1110×1174×25 HSF1 V**	**CR 1110×1174×25 HSF5 R** **CR 1110×1174×25 HSF5 V**

Please note that the product table only lists a selection of available sizes. Contact your SKF sales representative for complete information on availability

Radial shaft seals – HSF1 (split), HSF5 (solid) – inch dimensions

d_1 **1.000 – 12.484** in

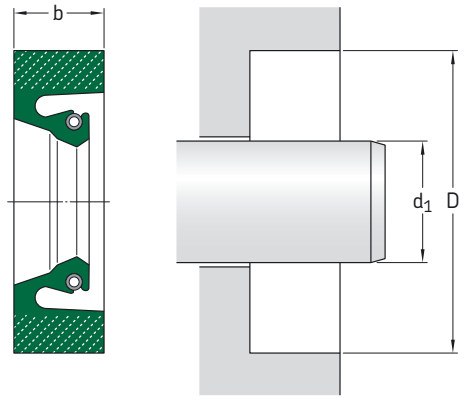

Please see **page 24–25** for housing bore requirements

Dimensions			**Designation**			
shaft	bore	nominal seal width	split version (HSF1) lip material		solid version (HSF5) lip material	
d_1	D	b	R	V	R	V
in/*mm*			–			
1.000 *25,4*	1.874 *47,6*	0.375 *9,5*	**CR HSF1 5001 R**	**CR HSF1 5001 V**	**CR HSF5 5001 R**	**CR HSF5 5001 V**
2.750 *69,9*	3.375 *85,7*	0.312 *7,9*	**CR HSF1 5156 R**	**CR HSF1 5156 V**	**CR HSF5 5156 R**	**CR HSF5 5156 V**
3.248 *82,5*	4.500 *114,3*	0.500 *12,7*	**CR HSF1 5225 R**	**CR HSF1 5225 V**	**CR HSF5 5225 R**	**CR HSF5 5225 V**
3.500 *88,9*	4.500 *114,3*	0.500 *12,7*	**CR HSF1 5252 R**	**CR HSF1 5252 V**	**CR HSF5 5252 R**	**CR HSF5 5252 V**
3.874 *98,4*	4.878 *123,9*	0.500 *12,7*	**CR HSF1 5265 R**	**CR HSF1 5265 V**	**CR HSF5 5265 R**	**CR HSF5 5265 V**
4.000 *101,6*	5.000 *127*	0.500 *12,7*	**CR HSF1 5310 R**	**CR HSF1 5310 V**	**CR HSF5 5310 R**	**CR HSF5 5310 V**
4.425 *112,4*	5.500 *139,7*	0.562 *14,3*	**CR HSF1 5353 R**	**CR HSF1 5353 V**	**CR HSF5 5353 R**	**CR HSF5 5353 V**
4.437 *112,7*	5.465 *138,8*	0.583 *14,8*	**CR HSF1 5351 R**	**CR HSF1 5351 V**	**CR HSF5 5351 R**	**CR HSF5 5351 V**
4.874 *123,8*	5.874 *149,2*	0.500 *12,7*	**CR HSF1 5391 R**	**CR HSF1 5391 V**	**CR HSF5 5391 R**	**CR HSF5 5391 V**
5.205 *132,2*	6.504 *165,2*	0.591 *15*	**CR HSF1 5431 R**	**CR HSF1 5431 V**	**CR HSF5 5431 R**	**CR HSF5 5431 V**
5.622 *142,8*	6.622 *168,2*	0.625 *15,9*	**CR HSF1 5471 R**	**CR HSF1 5471 V**	**CR HSF5 5471 R**	**CR HSF5 5471 V**
5.750 *146,1*	7.000 *177,8*	0.625 *15,9*	**CR HSF1 5489 R**	**CR HSF1 5489 V**	**CR HSF5 5489 R**	**CR HSF5 5489 V**
5.874 *149,2*	7.000 *177,8*	0.492 *12,5*	**CR HSF1 5498 R**	**CR HSF1 5498 V**	**CR HSF5 5498 R**	**CR HSF5 5498 V**
6.000 *152,4*	7.126 *181*	0.630 *16*	**CR HSF1 5509 R**	**CR HSF1 5509 V**	**CR HSF5 5509 R**	**CR HSF5 5509 V**
	7.500 *190,5*	0.625 *15,9*	**CR HSF1 5510 R**	**CR HSF1 5510 V**	**CR HSF5 5510 R**	**CR HSF5 5510 V**
6.500 *165,1*	8.000 *203,2*	0.750 *19,1*	**CR HSF1 5570 R**	**CR HSF1 5570 V**	**CR HSF5 5570 R**	**CR HSF5 5570 V**
6.748 *171,4*	7.750 *196,9*	0.750 *19,1*	**CR HSF1 5585 R**	**CR HSF1 5585 V**	**CR HSF5 5585 R**	**CR HSF5 5585 V**

Please note that the product table only lists a selection of available sizes. Contact your SKF sales representative for complete information on availability

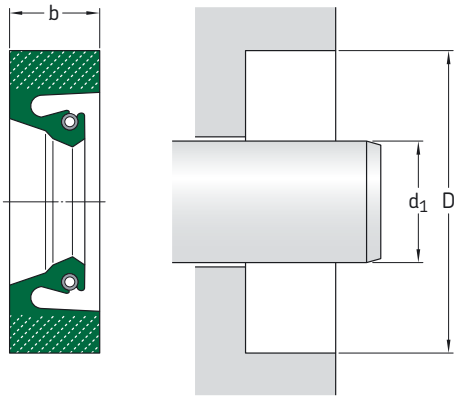

Please see
page 24–25
for housing bore
requirements

Dimensions			**Designation**			
shaft	bore	nominal seal width	split version (HSF1) lip material		solid version (HSF5) lip material	
d_1	D	b	R	V	R	V
in/*mm*			–			
7.000 *177,8*	8.000 *203,2*	0.437 *11,1*	**CR HSF1 5587 R**	**CR HSF1 5587 V**	**CR HSF5 5587 R**	**CR HSF5 5587 V**
	8.250 *209,6*	0.750 *19,1*	**CR HSF1 5600 R**	**CR HSF1 5600 V**	**CR HSF5 5600 R**	**CR HSF5 5600 V**
7.250 *184,2*	8.500 *215,9*	0.625 *15,9*	**CR HSF1 5624 R**	**CR HSF1 5624 V**	**CR HSF5 5624 R**	**CR HSF5 5624 V**
7.500 *190,5*	8.500 *215,9*	0.625 *15,9*	**CR HSF1 5662 R**	**CR HSF1 5662 V**	**CR HSF5 5662 R**	**CR HSF5 5662 V**
7.677 *195*	8.677 *220,4*	0.500 *12,7*	**CR HSF1 5667 R**	**CR HSF1 5667 V**	**CR HSF5 5667 R**	**CR HSF5 5667 V**
8.598 *218,4*	9.843 *250*	0.591 *15*	**CR HSF1 5764 R**	**CR HSF1 5764 V**	**CR HSF5 5764 R**	**CR HSF5 5764 V**
8.750 *222,3*	10.000 *254*	0.625 *15,9*	**CR HSF1 5790 R**	**CR HSF1 5790 V**	**CR HSF5 5790 R**	**CR HSF5 5790 V**
9.625 *244,5*	11.635 *295,5*	1.000 *25,4*	**CR HSF1 5878 R**	**CR HSF1 5878 V**	**CR HSF5 5878 R**	**CR HSF5 5878 V**
9.843 *250*	10.843 *275,4*	0.500 *12,7*	**CR HSF1 5885 R**	**CR HSF1 5885 V**	**CR HSF5 5885 R**	**CR HSF5 5885 V**
10.000 *254*	11.250 *285,8*	0.625 *15,9*	**CR HSF1 5910 R**	**CR HSF1 5910 V**	**CR HSF5 5910 R**	**CR HSF5 5910 V**
10.250 *260,4*	12.250 *311,2*	0.750 *19,1*	**CR HSF1 5950 R**	**CR HSF1 5950 V**	**CR HSF5 5950 R**	**CR HSF5 5950 V**
11.000 *279,4*	12.181 *309,4*	0.591 *15*	**CR HSF1 6000 R**	**CR HSF1 6000 V**	**CR HSF5 6000 R**	**CR HSF5 6000 V**
11.250 *285,8*	12.500 *317,5*	0.625 *15,9*	**CR HSF1 6040 R**	**CR HSF1 6040 V**	**CR HSF5 6040 R**	**CR HSF5 6040 V**
11.260 *286*	13.250 *336,6*	0.591 *15*	**CR HSF1 6049 R**	**CR HSF1 6049 V**	**CR HSF5 6049 R**	**CR HSF5 6049 V**
11.417 *290*	12.417 *315,4*	0.500 *12,7*	**CR HSF1 6055 R**	**CR HSF1 6055 V**	**CR HSF5 6055 R**	**CR HSF5 6055 V**
12.250 *311,2*	14.250 *362*	0.812 *20,6*	**CR HSF1 6150 R**	**CR HSF1 6150 V**	**CR HSF5 6150 R**	**CR HSF5 6150 V**
12.484 *317,1*	14.000 *355,6*	0.630 *16*	**CR HSF1 6172 R**	**CR HSF1 6172 V**	**CR HSF5 6172 R**	**CR HSF5 6172 V**

Please note that the product table only lists a selection of available sizes. Contact your SKF sales representative for complete information on availability

Radial shaft seals – HSF1 (split), HSF5 (solid) – inch dimensions

d_1 **12.500 – 36.748** in

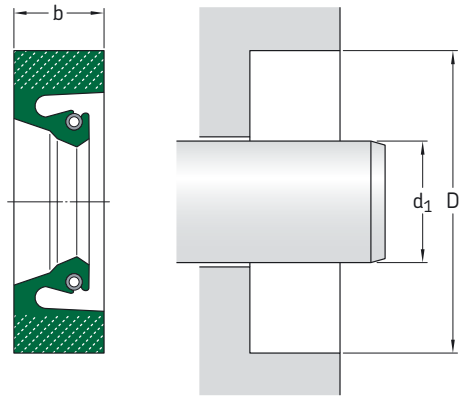

Please see **page 24–25** for housing bore requirements

Dimensions			**Designation**			
shaft	bore	nominal seal width	split version (HSF1) lip material		solid version (HSF5) lip material	
d_1	D	b	R	V	R	V
in/*mm*			–			
12.500 *317,5*	14.000 *355,6*	0.750 *19,1*	**CR HSF1 6173 R**	**CR HSF1 6173 V**	**CR HSF5 6173 R**	**CR HSF5 6173 V**
12.504 *317,6*	14.000 *355,6*	0.687 *17,4*	**CR HSF1 6175 R**	**CR HSF1 6175 V**	**CR HSF5 6175 R**	**CR HSF5 6175 V**
12.746 *323,7*	14.248 *361,9*	0.687 *17,4*	**CR HSF1 6192 R**	**CR HSF1 6192 V**	**CR HSF5 6192 R**	**CR HSF5 6192 V**
	14.750 *374,7*	1.000 *25,4*	**CR HSF1 6195 R**	**CR HSF1 6195 V**	**CR HSF5 6195 R**	**CR HSF5 6195 V**
13.000 *330,2*	14.500 *368,3*	0.687 *17,4*	**CR HSF1 6230 R**	**CR HSF1 6230 V**	**CR HSF5 6230 R**	**CR HSF5 6230 V**
	14.500 *368,3*	0.687 *17,4*	**CR HSF1 6230 R**	**CR HSF1 6230 V**	**CR HSF5 6230 R**	**CR HSF5 6230 V**
13.500 *342,9*	15.000 *381*	0.750 *19,1*	**CR HSF1 6271 R**	**CR HSF1 6271 V**	**CR HSF5 6271 R**	**CR HSF5 6271 V**
14.370 *365*	16.118 *409,4*	0.750 *19,1*	**CR HSF1 6350 R**	**CR HSF1 6350 V**	**CR HSF5 6350 R**	**CR HSF5 6350 V**
14.500 *368,3*	16.250 *412,8*	0.625 *15,9*	**CR HSF1 6370 R**	**CR HSF1 6370 V**	**CR HSF5 6370 R**	**CR HSF5 6370 V**
14.961 *380*	16.961 *430,8*	0.812 *20,6*	**CR HSF1 6425 R**	**CR HSF1 6425 V**	**CR HSF5 6425 R**	**CR HSF5 6425 V**
15.250 *387,4*	17.250 *438,2*	0.875 *22,2*	**CR HSF1 6460 R**	**CR HSF1 6460 V**	**CR HSF5 6460 R**	**CR HSF5 6460 V**
15.992 *406,2*	17.500 *444,5*	0.687 *17,4*	**CR HSF1 6550 R**	**CR HSF1 6550 V**	**CR HSF5 6550 R**	**CR HSF5 6550 V**
16.000 *406,4*	18.000 *457,2*	0.750 *19,1*	**CR HSF1 6560 R**	**CR HSF1 6560 V**	**CR HSF5 6560 R**	**CR HSF5 6560 V**
	18.000 *457,2*	0.812 *20,6*	**CR HSF1 6565 R**	**CR HSF1 6565 V**	**CR HSF5 6565 R**	**CR HSF5 6565 V**
	18.000 *457,2*	0.906 *23*	**CR HSF1 6575 R**	**CR HSF1 6575 V**	**CR HSF5 6575 R**	**CR HSF5 6575 V**
16.226 *412,1*	17.750 *450,9*	0.687 *17,4*	**CR HSF1 6590 R**	**CR HSF1 6590 V**	**CR HSF5 6590 R**	**CR HSF5 6590 V**
16.500 *419,1*	17.750 *450,9*	0.750 *19,1*	**CR HSF1 6600 R**	**CR HSF1 6600 V**	**CR HSF5 6600 R**	**CR HSF5 6600 V**
17.000 *431,8*	19.000 *482,6*	0.812 *20,6*	**CR HSF1 6645 R**	**CR HSF1 6645 V**	**CR HSF5 6645 R**	**CR HSF5 6645 V**

Please note that the product table only lists a selection of available sizes. Contact your SKF sales representative for complete information on availability

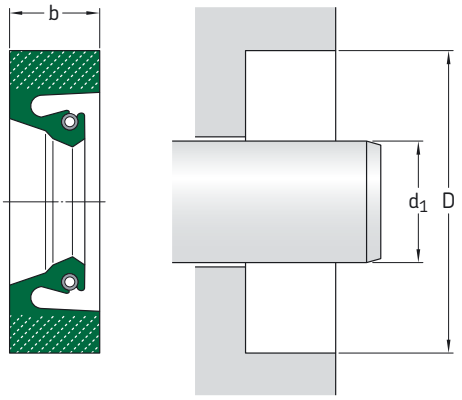

Please see
page 24–25
for housing bore
requirements

Dimensions			**Designation**			
shaft	bore	nominal seal width	split version (HSF1) lip material		solid version (HSF5) lip material	
d_1	D	b	R	V	R	V
in/*mm*			–			
17.248 *438,1*	18.748 *476,2*	0.750 *19,1*	**CR HSF1 6656 R**	**CR HSF1 6656 V**	**CR HSF5 6656 R**	**CR HSF5 6656 V**
18.169 *461,5*	21.260 *540*	1.220 *31*	**CR HSF1 6734 R**	**CR HSF1 6734 V**	**CR HSF5 6734 R**	**CR HSF5 6734 V**
20.500 *520,7*	22.500 *571,5*	1.000 *25,4*	**CR HSF1 6890 R**	**CR HSF1 6890 V**	**CR HSF5 6890 R**	**CR HSF5 6890 V**
21.000 *533,4*	23.000 *584,2*	0.875 *22,2*	**CR HSF1 6930 R**	**CR HSF1 6930 V**	**CR HSF5 6930 R**	**CR HSF5 6930 V**
22.000 *558,8*	24.000 *609,6*	0.875 *22,2*	**CR HSF1 7000 R**	**CR HSF1 7000 V**	**CR HSF5 7000 R**	**CR HSF5 7000 V**
23.248 *590,5*	25.250 *641,4*	0.812 *20,6*	**CR HSF1 7100 R**	**CR HSF1 7100 V**	**CR HSF5 7100 R**	**CR HSF5 7100 V**
23.501 *596,9*	22.001 *558,8*	0.750 *19,1*	**CR HSF1 6990 R**	**CR HSF1 6990 V**	**CR HSF5 6990 R**	**CR HSF5 6990 V**
30.000 *762*	32.500 *825,5*	1.000 *25,4*	**CR HSF1 7520 R**	**CR HSF1 7520 V**	**CR HSF5 7520 R**	**CR HSF5 7520 V**
30.461 *773,7*	32.500 *825,5*	0.906 *23*	**CR HSF1 7525 R**	**CR HSF1 7525 V**	**CR HSF5 7525 R**	**CR HSF5 7525 V**
31.000 *787,4*	33.000 *838,2*	0.906 *23*	**CR HSF1 7570 R**	**CR HSF1 7570 V**	**CR HSF5 7570 R**	**CR HSF5 7570 V**
31.250 *793,8*	33.250 *844,6*	0.750 *19,1*	**CR HSF1 7580 R**	**CR HSF1 7580 V**	**CR HSF5 7580 R**	**CR HSF5 7580 V**
32.500 *825,5*	34.500 *876,3*	0.875 *22,2*	**CR HSF1 7700 R**	**CR HSF1 7700 V**	**CR HSF5 7700 R**	**CR HSF5 7700 V**
	34.500 *876,3*	1.000 *25,4*	**CR HSF1 7710 R**	**CR HSF1 7710 V**	**CR HSF5 7710 R**	**CR HSF5 7710 V**
33.000 *838,2*	35.000 *889*	0.906 *23*	**CR HSF1 7730 R**	**CR HSF1 7730 V**	**CR HSF5 7730 R**	**CR HSF5 7730 V**
34.375 *873,1*	36.875 *936,6*	1.250 *31,8*	**CR HSF1 7810 R**	**CR HSF1 7810 V**	**CR HSF5 7810 R**	**CR HSF5 7810 V**
36.500 *927,1*	39.000 *990,6*	1.250 *31,8*	**CR HSF1 7895 R**	**CR HSF1 7895 V**	**CR HSF5 7895 R**	**CR HSF5 7895 V**
36.748 *933,4*	38.749 *984,2*	0.875 *22,2*	**CR HSF1 7900 R**	**CR HSF1 7900 V**	**CR HSF5 7900 R**	**CR HSF5 7900 V**

Please note that the product table only lists a selection of available sizes. Contact your SKF sales representative for complete information on availability

Radial shaft seals – HSF1 (split), HSF5 (solid) – inch dimensions

d_1 **38.000 – 48.000** in

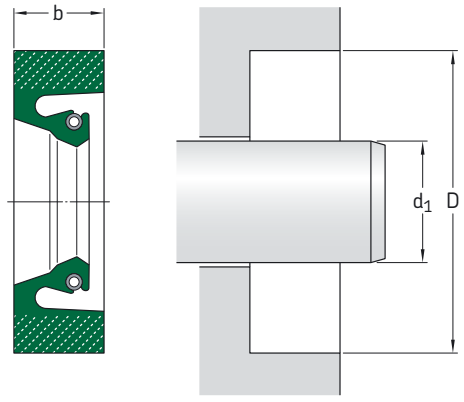

Please see
page 24–25
for housing bore
requirements

Dimensions			**Designation**			
shaft	bore	nominal seal width	split version (HSF1) lip material		solid version (HSF5) lip material	
d_1	D	b	R	V	R	V
in/*mm*			–			
38.000 *965,2*	40.000 *1 016*	0.875 *22,2*	**CR HSF1 7990 R**	**CR HSF1 7990 V**	**CR HSF5 7990 R**	**CR HSF5 7990 V**
39.118 *993,6*	40.000 *1 016*	0.500 *12,7*	**CR HSF1 8170 R**	**CR HSF1 8170 V**	**CR HSF5 8170 R**	**CR HSF5 8170 V**
48.000 *1 219,2*	49.000 *1 244,6*	1.260 *32*	**CR HSF1 8400 R**	**CR HSF1 8400 V**	**CR HSF5 8400 R**	**CR HSF5 8400 V**

Please note that the product table only lists a selection of available sizes. Contact your SKF sales representative for complete information on availability

Radial shaft seals – HSF2 (split), HSF6 (solid) series – metric dimensions

d_1 **127 – 800** mm

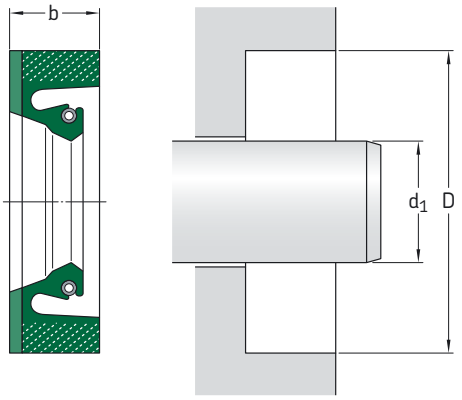

Please see
page 24–25
for housing bore
requirements

Dimensions			Designation	
shaft	bore	nominal seal width	split version (HSF2) lip material R, V	solid version (HSF6) lip material R, V
d_1	D	b		
mm			–	
127	158,8	12,3	**CR 127×158.8×12.3 HSF2 R** **CR 127×158.8×12.3 HSF2 V**	**CR 127×158.8×12.3 HSF6 R** **CR 127×158.8×12.3 HSF6 V**
275	319,5	19	**CR 275×319.5×19 HSF2 R** **CR 275×319.5×19 HSF2 V**	**CR 275×319.5×19 HSF6 R** **CR 275×319.5×19 HSF6 V**
320	364	18	**CR 320×364×18 HSF2 R** **CR 320×364×18 HSF2 V**	**CR 320×364×18 HSF6 R** **CR 320×364×18 HSF6 V**
800	864	21,6	**CR 800×864×21.6 HSF2 R** **CR 800×864×21.6 HSF2 V**	**CR 800×864×21.6 HSF6 R** **CR 800×864×21.6 HSF6 V**

Radial shaft seals – HSF2 (split), HSF6 (solid) – inch dimensions

d_1 **21.000** in

Dimensions			Designation			
shaft	bore	nominal seal width	split version (HSF2) lip material		solid version (HSF6) lip material	
d_1	D	b	R	V	R	V
in/*mm*			–			
21.000 *533,40*	23.000 *584,20*	0.875 *22,23*	**CR HSF2 6930 R**	**CR HSF2 6930 V**	**CR HSF6 6930 R**	**CR HSF6 6930 V**

Please note that the product table only lists a selection of available sizes. Contact your SKF sales representative for complete information on availability

Radial shaft seals – HSF3 (split), HSF7 (solid) – metric dimensions

d_1 **80 – 360** mm

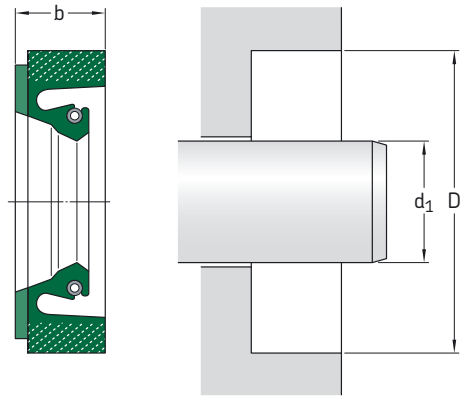

Please see **page 24–25** for housing bore requirements

Dimensions			**Designation**	
shaft	bore	nominal seal width	split version (HSF3) lip material R, V	solid version (HSF7) lip material R, V
d_1	D	b		
mm			–	
80	95	10	**CR 80×95×10 HSF3 R** **CR 80×95×10 HSF3 V**	**CR 80×95×10 HSF7 R** **CR 80×95×10 HSF7 V**
100	130	12,5	**CR 100×130×12.5 HSF3 R** **CR 100×130×12.5 HSF3 V**	**CR 100×130×12.5 HSF7 R** **CR 100×130×12.5 HSF7 V**
140	180	16	**CR 140×180×16 HSF3 R** **CR 140×180×16 HSF3 V**	**CR 140×180×16 HSF7 R** **CR 140×180×16 HSF7 V**
150	190	16	**CR 150×190×16 HSF3 R** **CR 150×190×16 HSF3 V**	**CR 150×190×16 HSF7 R** **CR 150×190×16 HSF7 V**
160	200	16	**CR 160×200×16 HSF3 R** **CR 160×200×16 HSF3 V**	**CR 160×200×16 HSF7 R** **CR 160×200×16 HSF7 V**
165	195	15	**CR 165×195×15 HSF3 R** **CR 165×195×15 HSF3 V**	**CR 165×195×15 HSF7 R** **CR 165×195×15 HSF7 V**
220	250	15	**CR 220×250×15 HSF3 R** **CR 220×250×15 HSF3 V**	**CR 220×250×15 HSF7 R** **CR 220×250×15 HSF7 V**
	260	18	**CR 220×260×18 HSF3 R** **CR 220×260×18 HSF3 V**	**CR 220×260×18 HSF7 R** **CR 220×260×18 HSF7 V**
230	270	16	**CR 230×270×16 HSF3 R** **CR 230×270×16 HSF3 V**	**CR 230×270×16 HSF7 R** **CR 230×270×16 HSF7 V**
235	265	15,3	**CR 235×265×15.3 HSF3 R** **CR 235×265×15.3 HSF3 V**	**CR 235×265×15.3 HSF7 R** **CR 235×265×15.3 HSF7 V**
240	280	18	**CR 240×280×18 HSF3 R** **CR 240×280×18 HSF3 V**	**CR 240×280×18 HSF7 R** **CR 240×280×18 HSF7 V**
	290	25	**CR 240×290×25 HSF3 R** **CR 240×290×25 HSF3 V**	**CR 240×290×25 HSF7 R** **CR 240×290×25 HSF7 V**
245	285	16	**CR 245×285×16 HSF3 R** **CR 245×285×16 HSF3 V**	**CR 245×285×16 HSF7 R** **CR 245×285×16 HSF7 V**
250	280	16	**CR 250×280×16 HSF3 R** **CR 250×280×16 HSF3 V**	**CR 250×280×16 HSF7 R** **CR 250×280×16 HSF7 V**
	290	16,5	**CR 250×290×16.5 HSF3 R** **CR 250×290×16.5 HSF3 V**	**CR 250×290×16.5 HSF7 R** **CR 250×290×16.5 HSF7 V**
270	310	18	**CR 270×310×18 HSF3 R** **CR 270×310×18 HSF3 V**	**CR 270×310×18 HSF7 R** **CR 270×310×18 HSF7 V**
280	320	18	**CR 280×320×18 HSF3 R** **CR 280×320×18 HSF3 V**	**CR 280×320×18 HSF7 R** **CR 280×320×18 HSF7 V**

Please note that the product table only lists a selection of available sizes. Contact your SKF sales representative for complete information on availability

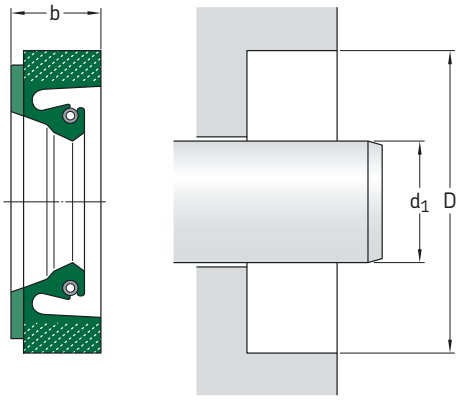

Please see
page 24–25
for housing bore
requirements

Dimensions			**Designation**	
shaft	bore	nominal seal width	split version (HSF3) lip material R, V	solid version (HSF7) lip material R, V
d_1	D	b		
mm			–	
285	325	18	**CR 285×325×18 HSF3 R**	**CR 285×325×18 HSF7 R**
			CR 285×325×18 HSF3 V	**CR 285×325×18 HSF7 V**
290	334	20,3	**CR 290×334×20.3 HSF3 R**	**CR 290×334×20.3 HSF7 R**
			CR 290×334×20.3 HSF3 V	**CR 290×334×20.3 HSF7 V**
300	340	16,5	**CR 300×340×16.5 HSF3 R**	**CR 300×340×16.5 HSF7 R**
			CR 300×340×16.5 HSF3 V	**CR 300×340×16.5 HSF7 V**
	340	18	**CR 300×340×18 HSF3 R**	**CR 300×340×18 HSF7 R**
			CR 300×340×18 HSF3 V	**CR 300×340×18 HSF7 V**
	344	20	**CR 300×344×20 HSF3 R**	**CR 300×344×20 HSF7 R**
			CR 300×344×20 HSF3 V	**CR 300×344×20 HSF7 V**
310	353	20	**CR 310×353×20 HSF3 R**	**CR 310×353×20 HSF7 R**
			CR 310×353×20 HSF3 V	**CR 310×353×20 HSF7 V**
	354	20	**CR 310×354×20 HSF3 R**	**CR 310×354×20 HSF7 R**
			CR 310×354×20 HSF3 V	**CR 310×354×20 HSF7 V**
315	360	20	**CR 315×360×20 HSF3 R**	**CR 315×360×20 HSF7 R**
			CR 315×360×20 HSF3 V	**CR 315×360×20 HSF7 V**
320	350	15	**CR 320×350×15 HSF3 R**	**CR 320×350×15 HSF7 R**
			CR 320×350×15 HSF3 V	**CR 320×350×15 HSF7 V**
	360	17,7	**CR 320×360×17.7 HSF3 R**	**CR 320×360×17.7 HSF7 R**
			CR 320×360×17.7 HSF3 V	**CR 320×360×17.7 HSF7 V**
325	365	16	**CR 325×365×16 HSF3 R**	**CR 325×365×16 HSF7 R**
			CR 325×365×16 HSF3 V	**CR 325×365×16 HSF7 V**
330	370	20	**CR 330×370×20 HSF3 R**	**CR 330×370×20 HSF7 R**
			CR 330×370×20 HSF3 V	**CR 330×370×20 HSF7 V**
	374	20	**CR 330×374×20 HSF3 R**	**CR 330×374×20 HSF7 R**
			CR 330×374×20 HSF3 V	**CR 330×374×20 HSF7 V**
340	372	16	**CR 340×372×16 HSF3 R**	**CR 340×372×16 HSF7 R**
			CR 340×372×16 HSF3 V	**CR 340×372×16 HSF7 V**
345	389	20	**CR 345×389×20 HSF3 R**	**CR 345×389×20 HSF7 R**
			CR 345×389×20 HSF3 V	**CR 345×389×20 HSF7 V**
350	390	18	**CR 350×390×18 HSF3 R**	**CR 350×390×18 HSF7 R**
			CR 350×390×18 HSF3 V	**CR 350×390×18 HSF7 V**
	394	20	**CR 350×394×20 HSF3 R**	**CR 350×394×20 HSF7 R**
			CR 350×394×20 HSF3 V	**CR 350×394×20 HSF7 V**
	394	22	**CR 350×394×22 HSF3 R**	**CR 350×394×22 HSF7 R**
			CR 350×394×22 HSF3 V	**CR 350×394×22 HSF7 V**
360	404	20	**CR 360×404×20 HSF3 R**	**CR 360×404×20 HSF7 R**
			CR 360×404×20 HSF3 V	**CR 360×404×20 HSF7 V**

Please note that the product table only lists a selection of available sizes. Contact your SKF sales representative for complete information on availability

Radial shaft seals – HSF3 (split), HSF7 (solid) – metric dimensions

d_1 **365 – 620** mm

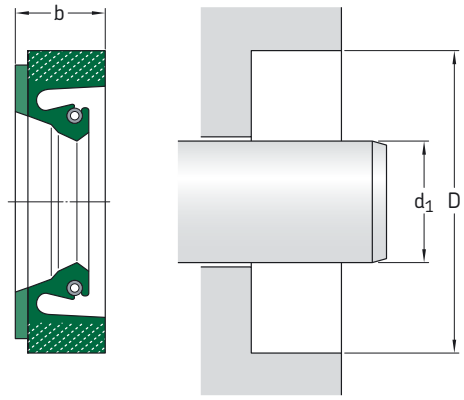

Please see **page 24–25** for housing bore requirements

Dimensions			**Designation**	
shaft	bore	nominal seal width	split version (HSF3) lip material R, V	solid version (HSF7) lip material R, V
d_1	D	b		
mm			–	
365	409,4	19,05	**CR 365×409.4×19.05 HSF3 R** **CR 365×409.4×19.05 HSF3 V**	**CR 365×409.4×19.05 HSF7 R** **CR 365×409.4×19.05 HSF7 V**
366	410	20	**CR 366×410×20 HSF3 R** **CR 366×410×20 HSF3 V**	**CR 366×410×20 HSF7 R** **CR 366×410×20 HSF7 V**
370	410	18	**CR 370×410×18 HSF3 R** **CR 370×410×18 HSF3 V**	**CR 370×410×18 HSF7 R** **CR 370×410×18 HSF7 V**
380	419	24	**CR 380×419×24 HSF3 R** **CR 380×419×24 HSF3 V**	**CR 380×419×24 HSF7 R** **CR 380×419×24 HSF7 V**
	424	20	**CR 380×424×20 HSF3 R** **CR 380×424×20 HSF3 V**	**CR 380×424×20 HSF7 R** **CR 380×424×20 HSF7 V**
385	425	18,3	**CR 385×425×18.3 HSF3 R** **CR 385×425×18.3 HSF3 V**	**CR 385×425×18.3 HSF7 R** **CR 385×425×18.3 HSF7 V**
387	431	22,5	**CR 387×431×22.5 HSF3 R** **CR 387×431×22.5 HSF3 V**	**CR 387×431×22.5 HSF7 R** **CR 387×431×22.5 HSF7 V**
390	430	18	**CR 390×430×18 HSF3 R** **CR 390×430×18 HSF3 V**	**CR 390×430×18 HSF7 R** **CR 390×430×18 HSF7 V**
400	440	18	**CR 400×440×18 HSF3 R** **CR 400×440×18 HSF3 V**	**CR 400×440×18 HSF7 R** **CR 400×440×18 HSF7 V**
	440	22	**CR 400×440×22 HSF3 R** **CR 400×440×22 HSF3 V**	**CR 400×440×22 HSF7 R** **CR 400×440×22 HSF7 V**
	444	20	**CR 400×444×20 HSF3 R** **CR 400×444×20 HSF3 V**	**CR 400×444×20 HSF7 R** **CR 400×444×20 HSF7 V**
	450	22	**CR 400×450×22 HSF3 R** **CR 400×450×22 HSF3 V**	**CR 400×450×22 HSF7 R** **CR 400×450×22 HSF7 V**
420	470	22	**CR 420×470×22 HSF3 R** **CR 420×470×22 HSF3 V**	**CR 420×470×22 HSF7 R** **CR 420×470×22 HSF7 V**
430	480	22	**CR 430×480×22 HSF3 R** **CR 430×480×22 HSF3 V**	**CR 430×480×22 HSF7 R** **CR 430×480×22 HSF7 V**
440	490	22	**CR 440×490×22 HSF3 R** **CR 440×490×22 HSF3 V**	**CR 440×490×22 HSF7 R** **CR 440×490×22 HSF7 V**
450	494	20	**CR 450×494×20 HSF3 R** **CR 450×494×20 HSF3 V**	**CR 450×494×20 HSF7 R** **CR 450×494×20 HSF7 V**
460	510	22	**CR 460×510×22 HSF3 R** **CR 460×510×22 HSF3 V**	**CR 460×510×22 HSF7 R** **CR 460×510×22 HSF7 V**
	510	22	**CR 460×510×22 HSF3 R** **CR 460×510×22 HSF3 V**	**CR 460×510×22 HSF7 R** **CR 460×510×22 HSF7 V**

Please note that the product table only lists a selection of available sizes. Contact your SKF sales representative for complete information on availability

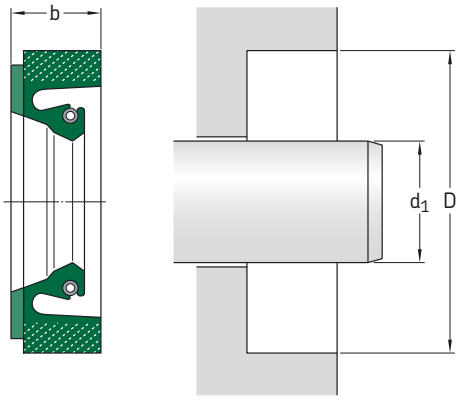

Please see **page 24–25** for housing bore requirements

Dimensions			**Designation**	
shaft	bore	nominal seal width	split version (HSF3) lip material R, V	solid version (HSF7) lip material R, V
d_1	D	b		
mm			–	
480	530	22	**CR 480×530×22 HSF3 R** **CR 480×530×22 HSF3 V**	**CR 480×530×22 HSF7 R** **CR 480×530×22 HSF7 V**
500	544	20	**CR 500×544×20 HSF3 R** **CR 500×544×20 HSF3 V**	**CR 500×544×20 HSF7 R** **CR 500×544×20 HSF7 V**
515	555	20	**CR 515×555×20 HSF3 R** **CR 515×555×20 HSF3 V**	**CR 515×555×20 HSF7 R** **CR 515×555×20 HSF7 V**
520	564	20	**CR 520×564×20 HSF3 R** **CR 520×564×20 HSF3 V**	**CR 520×564×20 HSF7 R** **CR 520×564×20 HSF7 V**
	570	22	**CR 520×570×22 HSF3 R** **CR 520×570×22 HSF3 V**	**CR 520×570×22 HSF7 R** **CR 520×570×22 HSF7 V**
530	580	22	**CR 530×580×22 HSF3 R** **CR 530×580×22 HSF3 V**	**CR 530×580×22 HSF7 R** **CR 530×580×22 HSF7 V**
540	590	22	**CR 540×590×22 HSF3 R** **CR 540×590×22 HSF3 V**	**CR 540×590×22 HSF7 R** **CR 540×590×22 HSF7 V**
	590	25	**CR 540×590×25 HSF3 R** **CR 540×590×25 HSF3 V**	**CR 540×590×25 HSF7 R** **CR 540×590×25 HSF7 V**
545	596,9	19,05	**CR 545×596.9×19.05 HSF3 R** **CR 545×596.9×19.05 HSF3 V**	**CR 545×596.9×19.05 HSF7 R** **CR 545×596.9×19.05 HSF7 V**
550	600	22	**CR 550×600×22 HSF3 R** **CR 550×600×22 HSF3 V**	**CR 550×600×22 HSF7 R** **CR 550×600×22 HSF7 V**
560	603	20	**CR 560×603×20 HSF3 R** **CR 560×603×20 HSF3 V**	**CR 560×603×20 HSF7 R** **CR 560×603×20 HSF7 V**
	604	20	**CR 560×604×20 HSF3 R** **CR 560×604×20 HSF3 V**	**CR 560×604×20 HSF7 R** **CR 560×604×20 HSF7 V**
580	630	22	**CR 580×630×22 HSF3 R** **CR 580×630×22 HSF3 V**	**CR 580×630×22 HSF7 R** **CR 580×630×22 HSF7 V**
590	640	22	**CR 590×640×22 HSF3 R** **CR 590×640×22 HSF3 V**	**CR 590×640×22 HSF7 R** **CR 590×640×22 HSF7 V**
600	640	18	**CR 600×640×18 HSF3 R** **CR 600×640×18 HSF3 V**	**CR 600×640×18 HSF7 R** **CR 600×640×18 HSF7 V**
614	658	20	**CR 614×658×20 HSF3 R** **CR 614×658×20 HSF3 V**	**CR 614×658×20 HSF7 R** **CR 614×658×20 HSF7 V**
620	670	22	**CR 620×670×22 HSF3 R** **CR 620×670×22 HSF3 V**	**CR 620×670×22 HSF7 R** **CR 620×670×22 HSF7 V**

Please note that the product table only lists a selection of available sizes. Contact your SKF sales representative for complete information on availability

Radial shaft seals – HSF3 (split), HSF7 (solid) – metric dimensions

d_1 **640 – 1 030** mm

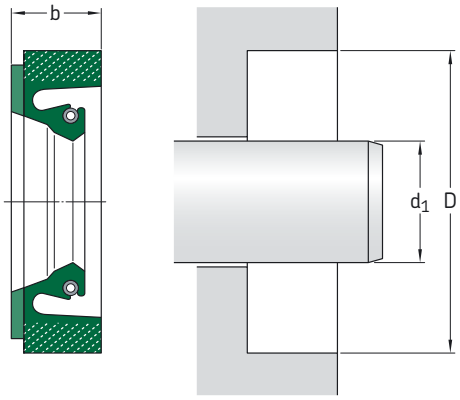

Please see **page 24–25** for housing bore requirements

Dimensions			**Designation**	
shaft	bore	nominal seal width	split version (HSF3) lip material R, V	solid version (HSF7) lip material R, V
d_1	D	b		
mm			–	
640	680	20	**CR 640×680×20 HSF3 R** **CR 640×680×20 HSF3 V**	**CR 640×680×20 HSF7 R** **CR 640×680×20 HSF7 V**
650	700	22	**CR 650×700×22 HSF3 R** **CR 650×700×22 HSF3 V**	**CR 650×700×22 HSF7 R** **CR 650×700×22 HSF7 V**
660	700	18	**CR 660×700×18 HSF3 R** **CR 660×700×18 HSF3 V**	**CR 660×700×18 HSF7 R** **CR 660×700×18 HSF7 V**
665	715	22	**CR 665×715×22 HSF3 R** **CR 665×715×22 HSF3 V**	**CR 665×715×22 HSF7 R** **CR 665×715×22 HSF7 V**
670	714	22	**CR 670×714×22 HSF3 R** **CR 670×714×22 HSF3 V**	**CR 670×714×22 HSF7 R** **CR 670×714×22 HSF7 V**
700	764	25	**CR 700×764×25 HSF3 R** **CR 700×764×25 HSF3 V**	**CR 700×764×25 HSF7 R** **CR 700×764×25 HSF7 V**
710	774	25	**CR 710×774×25 HSF3 R** **CR 710×774×25 HSF3 V**	**CR 710×774×25 HSF7 R** **CR 710×774×25 HSF7 V**
724	775	22	**CR 724×775×22 HSF3 R** **CR 724×775×22 HSF3 V**	**CR 724×775×22 HSF7 R** **CR 724×775×22 HSF7 V**
740	780	16,5	**CR 740×780×16.5 HSF3 R** **CR 740×780×16.5 HSF3 V**	**CR 740×780×16.5 HSF7 R** **CR 740×780×16.5 HSF7 V**
750	814	28	**CR 750×814×28 HSF3 R** **CR 750×814×28 HSF3 V**	**CR 750×814×28 HSF7 R** **CR 750×814×28 HSF7 V**
775	839	25	**CR 775×839×25 HSF3 R** **CR 775×839×25 HSF3 V**	**CR 775×839×25 HSF7 R** **CR 775×839×25 HSF7 V**
790	834	25	**CR 790×834×25 HSF3 R** **CR 790×834×25 HSF3 V**	**CR 790×834×25 HSF7 R** **CR 790×834×25 HSF7 V**
	854	25	**CR 790×854×25 HSF3 R** **CR 790×854×25 HSF3 V**	**CR 790×854×25 HSF7 R** **CR 790×854×25 HSF7 V**
800	864	25	**CR 800×864×25 HSF3 R** **CR 800×864×25 HSF3 V**	**CR 800×864×25 HSF7 R** **CR 800×864×25 HSF7 V**
840	880	18	**CR 840×880×18 HSF3 R** **CR 840×880×18 HSF3 V**	**CR 840×880×18 HSF7 R** **CR 840×880×18 HSF7 V**
880	944	25,4	**CR 880×944×25.4 HSF3 R** **CR 880×944×25.4 HSF3 V**	**CR 880×944×25.4 HSF7 R** **CR 880×944×25.4 HSF7 V**

Please note that the product table only lists a selection of available sizes. Contact your SKF sales representative for complete information on availability

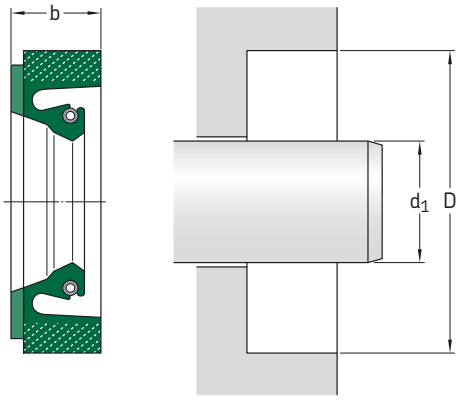

Please see
page 24–25
for housing bore
requirements

Dimensions			**Designation**	
shaft	bore	nominal seal width	split version (HSF3) lip material R, V	solid version (HSF7) lip material R, V
d_1	D	b		
mm			–	
890	930	18	**CR 890×930×18 HSF3 R** **CR 890×930×18 HSF3 V**	**CR 890×930×18 HSF7 R** **CR 890×930×18 HSF7 V**
910	974	25	**CR 910×974×25 HSF3 R** **CR 910×974×25 HSF3 V**	**CR 910×974×25 HSF7 R** **CR 910×974×25 HSF7 V**
970	1 034	25	**CR 970×1034×25 HSF3 R** **CR 970×1034×25 HSF3 V**	**CR 970×1034×25 HSF7 R** **CR 970×1034×25 HSF7 V**
985	1 045	25	**CR 985×1045×25 HSF3 R** **CR 985×1045×25 HSF3 V**	**CR 985×1045×25 HSF7 R** **CR 985×1045×25 HSF7 V**
1 030	970	21,5	**CR 1030×970×21.5 HSF3 R** **CR 1030×970×21.5 HSF3 V**	**CR 1030×970×21.5 HSF7 R** **CR 1030×970×21.5 HSF7 V**

Please note that the product table only lists a selection of available sizes. Contact your SKF sales representative for complete information on availability

Radial shaft seals – HSF3 (split), HSF7 (solid) – inch dimensions

d_1 **28.500 – 45.500** in

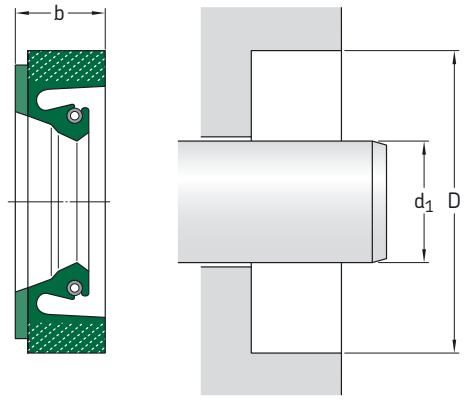

Please see **page 24–25** for housing bore requirements

Dimensions			**Designation**			
shaft	bore	nominal seal width	split version (HSF3) lip material		solid version (HSF7) lip material	
d_1	D	b	R	V	R	V
in/*mm*			–			
28.500 *215,90*	9.750 *247,65*	0.812 *20,62*	**CR HSF3 5766 R**	**CR HSF3 5766 V**	**CR HSF7 5766 R**	**CR HSF7 5766 V**
10.000 *254,00*	11.500 *292,10*	0.630 *16,00*	**CR HSF3 5920 R**	**CR HSF3 5920 V**	**CR HSF7 5920 R**	**CR HSF7 5920 V**
11.500 *292,10*	13.780 *350,01*	0.630 *16,00*	**CR HSF3 6075 R**	**CR HSF3 6075 V**	**CR HSF7 6075 R**	**CR HSF7 6075 V**
12.250 *311,15*	14.250 *361,95*	0.812 *20,62*	**CR HSF3 6150 R**	**CR HSF3 6150 V**	**CR HSF7 6150 R**	**CR HSF7 6150 V**
14.500 *368,30*	16.500 *419,10*	0.812 *20,62*	**CR HSF3 6370 R**	**CR HSF3 6370 V**	**CR HSF7 6370 R**	**CR HSF7 6370 V**
	16.500 *419,10*	1.152 *29,26*	**CR HSF3 6375 R**	**CR HSF3 6375 V**	**CR HSF7 6375 R**	**CR HSF7 6375 V**
14.750 *374,65*	16.500 *419,10*	0.875 *22,23*	**CR HSF3 6395 R**	**CR HSF3 6395 V**	**CR HSF7 6395 R**	**CR HSF7 6395 V**
15.250 *387,35*	17.250 *438,15*	1.000 *25,40*	**CR HSF3 6465 R**	**CR HSF3 6465 V**	**CR HSF7 6465 R**	**CR HSF7 6465 V**
16.500 *419,10*	18.000 *457,20*	0.750 *19,05*	**CR HSF3 6611 R**	**CR HSF3 6611 V**	**CR HSF7 6611 R**	**CR HSF7 6611 V**
35.500 *901,70*	37.500 *952,50*	0.875 *22,23*	**CR HSF3 7860 R**	**CR HSF3 7860 V**	**CR HSF7 7860 R**	**CR HSF7 7860 V**
36.000 *914,40*	38.500 *977,90*	0.875 *22,23*	**CR HSF3 7890 R**	**CR HSF3 7890 V**	**CR HSF7 7890 R**	**CR HSF7 7890 V**
45.500 *1 155,70*	47.000 *1 193,80*	0.812 *20,62*	**CR HSF3 9000 R**	**CR HSF3 9000 V**	**CR HSF7 9000 R**	**CR HSF7 9000 V**

Please note that the product table only lists a selection of available sizes. Contact your SKF sales representative for complete information on availability

Radial shaft seals – HSF4 (split), HSF8 (solid) – metric dimensions

d_1 **75 – 660** mm

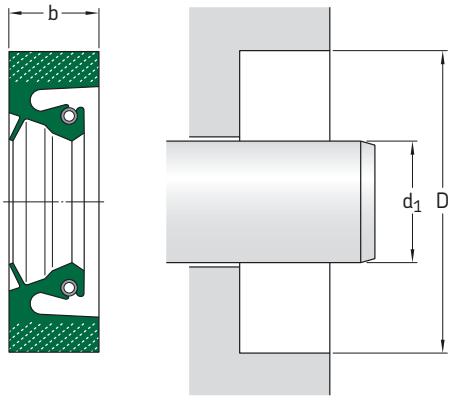

Please see
page 24–25
for housing bore
requirements

Dimensions			**Designation**	
shaft	bore	nominal seal width	split version (HSF4) lip material R, V	solid version (HSF8) lip material R, V
d_1	D	b		
mm			–	
75	107	12,5	**CR 75×107×12.5 HSF4 R** **CR 75×107×12.5 HSF4 V**	**CR 75×107×12.5 HSF8 R** **CR 75×107×12.5 HSF8 V**
105	145	16	**CR 105×145×16 HSF4 R** **CR 105×145×16 HSF4 V**	**CR 105×145×16 HSF8 R** **CR 105×145×16 HSF8 V**
215	250	16	**CR 215×250×16 HSF4 R** **CR 215×250×16 HSF4 V**	**CR 215×250×16 HSF8 R** **CR 215×250×16 HSF8 V**
	340	16	**CR 300×340×16 HSF4 R** **CR 300×340×16 HSF4 V**	**CR 300×340×16 HSF8 R** **CR 300×340×16 HSF8 V**
300	340	16	**CR 300×340×16 HSF4 R** **CR 300×340×16 HSF4 V**	**CR 300×340×16 HSF8 R** **CR 300×340×16 HSF8 V**
330	374	20	**CR 330×374×20 HSF4 R** **CR 330×374×20 HSF4 V**	**CR 330×374×20 HSF8 R** **CR 330×374×20 HSF8 V**
370	410	15	**CR 370×410×15 HSF4 R** **CR 370×410×15 HSF4 V**	**CR 370×410×15 HSF8 R** **CR 370×410×15 HSF8 V**
	420	20	**CR 380×420×20 HSF4 R** **CR 380×420×20 HSF4 V**	**CR 380×420×20 HSF8 R** **CR 380×420×20 HSF8 V**
380	420	22	**CR 380×420×22 HSF4 R** **CR 380×420×22 HSF4 V**	**CR 380×420×22 HSF8 R** **CR 380×420×22 HSF8 V**
	490	20	**CR 440×490×20 HSF4 R** **CR 440×490×20 HSF4 V**	**CR 440×490×20 HSF8 R** **CR 440×490×20 HSF8 V**
440	490	22	**CR 440×490×22 HSF4 R** **CR 440×490×22 HSF4 V**	**CR 440×490×22 HSF8 R** **CR 440×490×22 HSF8 V**
450	500	22	**CR 450×500×22 HSF4 R** **CR 450×500×22 HSF4 V**	**CR 450×500×22 HSF8 R** **CR 450×500×22 HSF8 V**
460	500	16	**CR 460×500×16 HSF4 R** **CR 460×500×16 HSF4 V**	**CR 460×500×16 HSF8 R** **CR 460×500×16 HSF8 V**
500	540	22	**CR 500×540×22 HSF4 R** **CR 500×540×22 HSF4 V**	**CR 500×540×22 HSF8 R** **CR 500×540×22 HSF8 V**
660	704	20	**CR 660×704×20 HSF4 R** **CR 660×704×20 HSF4 V**	**CR 660×704×20 HSF8 R** **CR 660×704×20 HSF8 V**

Please note that the product table only lists a selection of available sizes. Contact your SKF sales representative for complete information on availability

Radial shaft seals – HSF4 (split), HSF8 (solid) – inch dimensions

d_1 **7.250 – 38.000** in

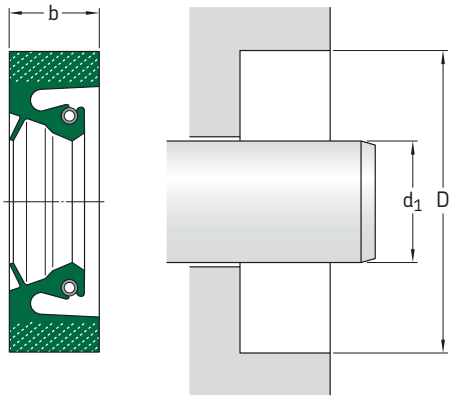

Please see **page 24–25** for housing bore requirements

Dimensions			**Designation**			
shaft	bore	nominal seal width	split version (HSF4) lip material		solid version (HSF8) lip material	
d_1	D	b	R	V	R	V
in/*mm*			–			
7.250 *184,15*	5.750 *146,05*	0.625 *15,88*	**CR HSF4 5490 R**	**CR HSF4 5490 V**	**CR HSF8 5490 R**	**CR HSF8 5490 V**
38.000 *965,2*	40.000 *1 016*	0.875 *22,23*	**CR HSF4 7990 R**	**CR HSF4 7990 V**	**CR HSF8 7990 R**	**CR HSF8 7990 V**

Please note that the product table only lists a selection of available sizes. Contact your SKF sales representative for complete information on availability

Radial shaft seals – HSF9 – metric dimensions

d_1 **200 – 860** mm

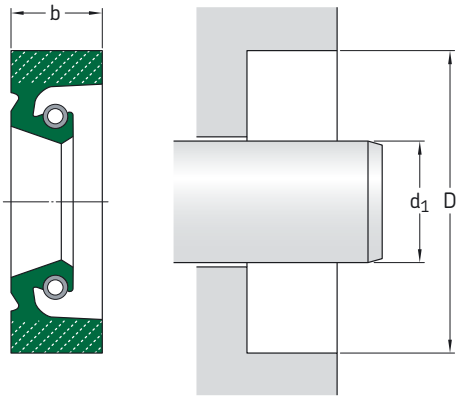

Please see **page 24–25** for housing bore requirements

Dimensions			Designation	
shaft	bore	nominal seal width	lip material	
d_1	D	b	R	V
mm			–	
200	240	16,5	**CR 200×240×16.5 HSF9 R**	**CR 200×240×16.5 HSF9 V**
335	379	20	**CR 335×379×20 HSF9 R**	**CR 335×379×20 HSF9 V**
346	390	18	**CR 346×390×18 HSF9 R**	**CR 346×390×18 HSF9 V**
360	404	17,45	**CR 360×404×17.45 HSF9 R**	**CR 360×404×17.45 HSF9 V**
480	530	22	**CR 480×530×22 HSF9 R**	**CR 480×530×22 HSF9 V**
500	540	20	**CR 500×540×20 HSF9 R**	**CR 500×540×20 HSF9 V**
515	555	20	**CR 515×555×20 HSF9 R**	**CR 515×555×20 HSF9 V**
600	644	20	**CR 600×644×20 HSF9 R**	**CR 600×644×20 HSF9 V**
700	750	25	**CR 700×750×25 HSF9 R**	**CR 700×750×25 HSF9 V**
751	814	25,4	**CR 751×814×25.4 HSF9 R**	**CR 751×814×25.4 HSF9 V**
840	904	25	**CR 840×904×25 HSF9 R**	**CR 840×904×25 HSF9 V**
860	924	25	**CR 860×924×25 HSF9 R**	**CR 860×924×25 HSF9 V**

Radial shaft seals – HSF9 – inch dimensions

d_1 **17.875 – 25.996** in

Dimensions			Designation	
shaft	bore	nominal seal width	lip material	
d_1	D	b	R	V
in/*mm*			–	
17.875 *454,03*	19.850 *504,19*	0.812 *20,62*	**CR HSF9 6715 R**	**CR HSF9 6715 V**
25.996 *660,30*	28.000 *711,20*	1.000 *25,40*	**CR HSF9 7233 R**	**CR HSF9 7233 V**

Please note that the product table only lists a selection of available sizes. Contact your SKF sales representative for complete information on availability

Radial shaft seals – HS4, HS5 – metric dimensions

d_1 **230 – 1 055** mm

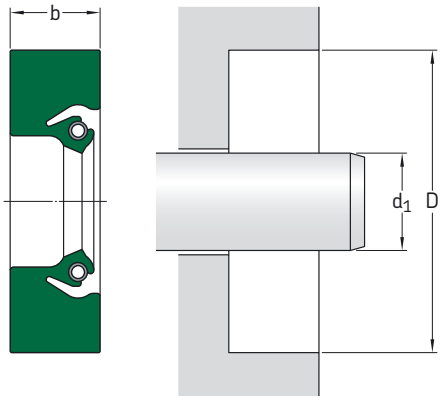

Please see **page 24–25** for housing bore requirements

Dimensions			Design	Lip material	Designation
shaft	bore	nominal seal width			
d_1	D	b			
mm			–	–	–
230	269	22	HS5	R	**CR 595195**
240	279	22	HS5	R	**CR 595190**
245	290	15	HS4	V	**CR 596309**
260	285,4	12,7	HS5	R	**CR 1023015**
280	325	24	HS5	R	**CR 595193**
310	354	20	HS5	R	**CR 595681**
315	355	16	HS4	V	**CR 1240234**
325	368	20	HS5	R	**CR 595680**
350	400	25,4	HS5	R	**CR 595191**
360	390	18	HS5	H	**CR 1417075**
390	434	20	HS5	R	**CR 1535345**
400	444	20	HS5	R	**CR 595291**
	447	20	HS5	R	**CR 1574445**
	450	25	HS5	R	**CR 595194**
410	454	20	HS5	R	**CR 594849**
470	520	20,7	HS4	R	**CR 1850503**
475	525	25	HS4	R	**CR 1870504**
480	530	25	HS5	R	**CR 595199**
490	530	20,5	HS5	D	**CR 595169**
515	555	20	HS5	R	**CR 2027295**
519	560	25	HS5	D	**CR 596075**
520	570	24	HS5	R	**CR 595192**
525	575	20,7	HS4	R	**CR 2066503**
530	575	20	HS5	R	**CR 594770**
540	584	20	HS4	R	**CR 2126344**

Dimensions			Design	Lip material	Designation
shaft	bore	nominal seal width			
d_1	D	b			
mm			–	–	–
700	740	20	HS5	D	**CR 2755285**
710	760	25	HS5	D	**CR 2795558**
712	757	20,5	HS5	D	**CR 595168**
778	818	20,5	HS5	D	**CR 595167**
780	830	22	HS5	R	**CR 3070565**
910	966	17,86	HS5	R	**CR 3582648**
978	1 018	18	HS5	R	**CR 595118**
1 055	1 100	25	HS5	R	**CR 4153425**
	1 100	25	HS5	D	**CR 595215**

Please note that the product table only lists a selection of available sizes. These seals are made to order to fit any size request within the ranges stated in **table 9** on **page 31**

Radial shaft seals – HS4, HS5 – inch dimensions

d_1 **6.438 – 72.750** in

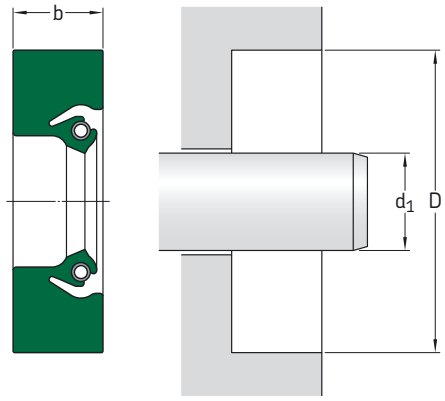

Please see **page 24–25** for housing bore requirements

Dimensions shaft d_1	bore D	nominal seal width b	Design	Lip material	Designation
in/*mm*			–	–	–
6.438 *163,53*	7.688 *195,28*	0.625 *15,88*	HS5	R	**CR 596043**
7.125 *180,98*	8.125 *206,38*	0.500 *12,70*	HS5	R	**CR 595761**
7.188 *182,58*	8.640 *219,46*	0.625 *15,88*	HS5	R	**CR 595643**
7.500 *190,50*	8.750 *222,25*	0.625 *15,88*	HS5	D	**CR 595822**
7.750 *196,85*	8.750 *222,25*	0.625 *15,88*	HS5	D	**CR 595813**
8.000 *203,20*	9.500 *241,30*	0.625 *15,88*	HS5	R	**CR 595404**
8.625 *219,08*	10.125 *257,18*	0.609 *15,47*	HS5	R	**CR 595566**
9.000 *228,60*	10.500 *266,70*	0.625 *15,88*	HS5	R	**CR 594641**
10.250 *260,35*	12.017 *305,23*	0.750 *19,05*	HS5	R	**CR 1025435**
11.250 *285,75*	12.750 *323,85*	0.625 *15,88*	HS5	R	**CR 1125235**
11.500 *292,10*	13.250 *336,55*	0.750 *19,05*	HS5	R	**CR 594850**
12.000 *304,80*	13.000 *330,20*	0.500 *12,70*	HS5	R	**CR 1200015**
12.250 *311,15*	13.750 *349,25*	0.750 *19,05*	HS5	R	**CR 1225125**
13.375 *339,73*	14.875 *377,83*	0.625 *15,88*	HS5	R	**CR 1338235**
13.500 *342,90*	15.000 *381,00*	0.625 *15,88*	HS5	D	**CR 1350235**
13.985 *355,22*	15.500 *393,70*	0.625 *15,88*	HS4	R	**CR 526447**
14.361 *364,77*	15.748 *400,00*	0.709 *18,01*	HS4	R	**CR 595175**
15.748 *400,00*	17.717 *450,01*	0.890 *22,61*	HS4	R	**CR 1574443**
16.000 *406,40*	17.000 *431,80*	0.500 *12,70*	HS4	R	**CR 1600014**
20.000 *508,00*	22.000 *558,80*	0.500 *12,70*	HS5	R	**CR 595044**
21.000 *533,40*	23.000 *584,20*	0.813 *20,65*	HS4	R	**CR 526719**
21.750 *552,45*	23.250 *590,55*	0.625 *15,88*	HS5	R	**CR 593520**
24.000 *609,60*	25.500 *647,70*	0.750 *19,05*	HS5	R	**CR 593519**
25.000 *635,00*	27.000 *685,80*	0.875 *22,23*	HS5	R	**CR 593183**
27.000 *685,80*	29.000 *736,60*	0.813 *20,65*	HS5	R	**CR 2700555**
33.000 *838,20*	34.250 *869,95*	0.625 *15,88*	HS5	D	**CR 530414**
53.000 *1346,20*	54.875 *1393,83*	0.813 *20,65*	HS4	R	**CR 595881**
72.750 *1847.85*	74.000 *1879.60*	0.719 *18.26*	HS5	R	**CR 7275135**

Please note that the product table only lists a selection of available sizes. These seals are made to order to fit any size request within the ranges stated in **table 9** on **page 31**

Radial shaft seals – HS6, HS7, HS8 – metric dimensions

d_1 **145 – 1 070** mm

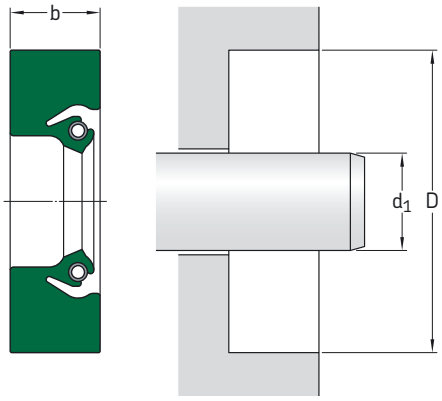

Please see **page 24–25** for housing bore requirements

Dimensions shaft d_1	bore D	nominal seal width b	Design	Lip material	Designation
mm			–	–	–
145	175	14	HS8	R	**CR 597350**
150	180	15,88	HS8	R	**CR 596132**
160	200	15,88	HS8	D	**CR 595294**
170	200	16	HS8	V	**CR 595073**
180	222	16	HS7	R	**CR 597574**
185	220	12,7	HS8	R	**CR 594916**
186	226	16	HS8	R	**CR 595185**
190	220	16	HS8	R	**CR 597537**
	230	16	HS8	R	**CR 594857**
200	238	19	HS6	R	**CR 595693**
	238,1	19,1	HS8	R	**CR 595101**
220	250	15	HS8	R	**CR 595075**
	250	16	HS8	D	**CR 596225**
	260	14,27	HS8	R	**CR 594917**
	260	15	HS8	R	**CR 596048**
	260	16	HS8	R	**CR 596324**
230	260	15	HS8	R	**CR 90057**
240	270	15	HS8	R	**CR 595165**
	275	15	HS8	R	**CR 597466**
	280	20	HS7	R	**CR 595668**
250	280	15	HS8	R	**CR 594732**
	290	15,88	HS8	R	**CR 596239**
260	290	16	HS8	R	**CR 1024068**
	300	20	HS8	R	**CR 1023258**
	304	20	HS8	R	**CR 1023398**
265	310	22	HS7	R	**CR 1043427**
266	310	20	HS8	R	**CR 1047388**
270	310	20	HS8	R	**CR 1063258**

Dimensions shaft d_1	bore D	nominal seal width b	Design	Lip material	Designation
mm			–	–	–
280	310	15	HS8	R	**CR 1102078**
	310	16	HS8	R	**CR 1102108**
	320	19,05	HS8	R	**CR 1102258**
	324	20	HS8	R	**CR 1102378**
	325	22	HS8	H	**CR 1102388**
290	330	20	HS8	R	**CR 1141258**
	335	24	HS7	R	**CR 1142427**
300	340	20	HS8	R	**CR 1181268**
	345	22	HS7	R	**CR 1181587**
310	340	15	HS8	V	**CR 1220055**
	340	15	HS8	R	**CR 1220058**
	350	20	HS8	D	**CR 1220289**
320	360	20	HS8	R	**CR 1259288**
	368,1	19,05	HS6	R	**CR 1259476**
330	380	22	HS8	H	**CR 1299498**
340	372	18	HS8	R	**CR 1339128**
	380	20	HS8	R	**CR 1338288**
345	390	25	HS8	R	**CR 1358418**
350	390	18	HS8	R	**CR 1378268**
355	393	20	HS8	R	**CR 1397198**
360	400	18	HS8	R	**CR 1417268**
	405	25	HS8	H	**CR 1417438**
	410,8	22,26	HS8	R	**CR 1417588**
380	418	19	HS7	R	**CR 1496257**
	418	19	HS8	R	**CR 1496258**
	420	19,05	HS8	V	**CR 1496268**
	420	20	HS8	D	**CR 1496238**
	420	20	HS7	R	**CR 1496247**
	420	20	HS8	H	**CR 1496248**
	420	20	HS8	D	**CR 1496289**
	430	20	HS8	R	**CR 1496508**
400	440	20	HS7	R	**CR 1574267**
	444	13,5	HS8	R	**CR 1574368**
	450	25	HS8	R	**CR 1574488**
	451	22,23	HS8	R	**CR 1574558**

Please note that the product table only lists a selection of available sizes. These seals are made to order to fit any size request within the ranges stated in **table 9** on **page 31**

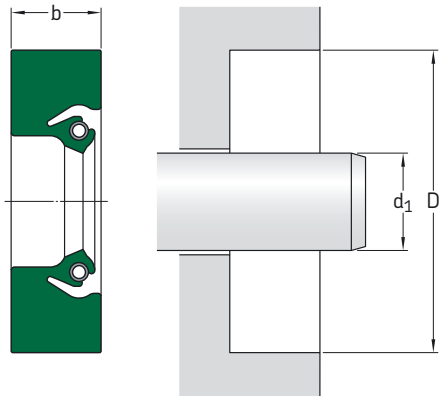

Please see **page 24–25** for housing bore requirements

Dimensions shaft d_1	bore D	nominal seal width b	Design	Lip material	Designation
mm			–	–	–
410	454	19	HS8	R	**CR 1614388**
420	460	20	HS7	R	**CR 1653267**
430	480	22	HS8	R	**CR 1692478**
440	480	20	HS8	R	**CR 1732288**
	480	21	HS8	H	**CR 1732308**
450	500	25	HS8	R	**CR 1771508**
452	503	20,65	HS8	R	**CR 1779558**
460	510	22	HS8	R	**CR 1811488**
480	530	20	HS8	R	**CR 1890548**
490	530	20	HS8	R	**CR 1929228**
	540	25	HS8	R	**CR 1929578**
	541	20,7	HS6	R	**CR 1929576**
500	550	25	HS8	R	**CR 1968388**
510	548	24,5	HS8	R	**CR 2007188**
515	555	20	HS8	R	**CR 2028258**
519	560	25	HS8	D	**CR 2043308**
530	576	21	HS8	R	**CR 2086448**
	580	20	HS8	R	**CR 2086508**
	580	22	HS8	R	**CR 2087568**
	580	25	HS8	R	**CR 2086468**
550	590	20	HS8	R	**CR 2165288**
556	610	25,4	HS7	R	**CR 2189637**
560	604	20	HS8	R	**CR 2204418**
590	640	25	HS8	R	**CR 2322498**
600	640	20	HS8	R	**CR 2362248**
615	665	24	HS8	R	**CR 2410488**
620	670	22	HS8	D	**CR 2440509**

Dimensions shaft d_1	bore D	nominal seal width b	Design	Lip material	Designation
mm			–	–	–
625	676	19	HS8	D	**CR 2460548**
630	670	20	HS8	R	**CR 2480258**
650	700	20	HS8	R	**CR 2559488**
690	730	20	HS8	R	**CR 2716288**
700	750	20	HS8	R	**CR 2755508**
	765	25	HS8	R	**CR 2755518**
720	771,1	21	HS8	D	**CR 2834578**
737	790	15,88	HS6	R	**CR 2901636**
740	790	15,88	HS8	R	**CR 2913488**
	790	25	HS8	R	**CR 2913508**
760	800	20,6	HS8	R	**CR 2992268**
	810	20,6	HS8	R	**CR 2992498**
	820	17,5	HS8	R	**CR 2992698**
780	820	18	HS8	R	**CR 3070248**
800	850	25,4	HS8	R	**CR 3150578**
810	860	20,65	HS7	R	**CR 3189557**
840	892	18	HS6	R	**CR 3307546**
850	900	22	HS8	R	**CR 3346478**
865	911	18	HS8	R	**CR 3405438**
867	920	15,88	HS6	R	**CR 3413566**
870	920	15,88	HS8	R	**CR 3425478**
910	966	17,86	HS6	R	**CR 3582646**
925	975	22	HS8	D	**CR 3641509**
930	982	22,23	HS6	R	**CR 3661546**
1 055	1 100	25	HS8	D	**CR 4153448**
1 070	1 120	20	HS6	R	**CR 4212496**

Please note that the product table only lists a selection of available sizes. These seals are made to order to fit any size request within the ranges stated in **table 9** on **page 31**

Radial shaft seals – HS6, HS7, HS8 – metric dimensions

d_1 **1 105 – 3 000** mm

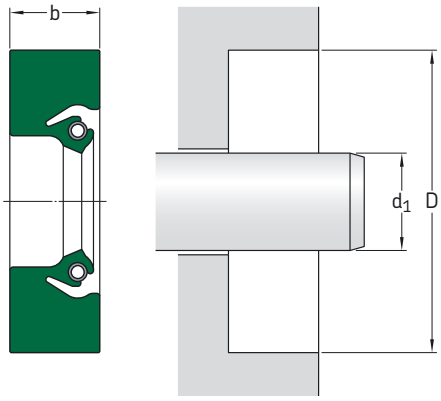

Please see **page 24–25** for housing bore requirements

Dimensions shaft d_1	bore D	nominal seal width b	Design	Lip material	Designation
mm			–	–	–
1 105	1 151	17,5	HS8	R	**CR 4350508**
1 180	1 230	20	HS6	R	**CR 4645556**
1 248	1 298	20,7	HS8	R	**CR 4913508**
1 370	1 420	19,83	HS8	H	**CR 5393458**
1 380	1 420	18	HS8	R	**CR 5433258**
1 675	1 725	20	HS8	R	**CR 6594478**
	1 725	20,62	HS8	D	**CR 6594558**
1 810	1 860	20	HS8	R	**CR 7125478**
	1 860	20,62	HS8	D	**CR 7153558**
2 850	2 900	20,63	HS8	D	**CR 595210**
2 900	2 959	17,33	HS6	R	**CR 597336**
3 000	3 050	20,63	HS8	D	**CR 595211**

Radial shaft seals – HS6, HS7, HS8 – inch dimensions

d_1 **5.500 – 11.000** in

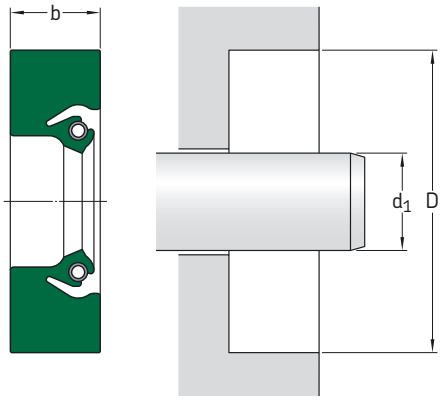

Please see **page 24–25** for housing bore requirements

Dimensions shaft d_1	bore D	nominal seal width b	Design	Lip material	Designation
in/*mm*			–	–	–
5.500	6.500	0.500	HS8	V	**CR 597548**
139,70	*165,10*	*12,70*			
6.000	7.250	0.625	HS8	R	**CR 592986**
152,40	*184,15*	*15,88*			
	7.500	0.535	HS8	R	**CR 60037**
	190,50	*13,59*			
6.300	7.874	0.596	HS8	D	**CR 595052**
160,00	*200,00*	*15,14*			
6.438	7.688	0.625	HS7	R	**CR 594760**
163,53	*195,28*	*15,88*			
7.000	8.000	0.500	HS8	D	**CR 70008**
177,80	*203,20*	*12,70*			
7.250	8.250	0.500	HS8	R	**CR 595012**
184,15	*209,55*	*12,70*			
	8.250	0.500	HS7	R	**CR 528377**
	209,55	*12,70*			
7.625	8.875	0.625	HS8	R	**CR 595207**
193,68	*225,43*	*15,88*			
7.750	8.750	0.500	HS8	R	**CR 529601**
196,85	*222,25*	*12,70*			
8.000	9.000	0.625	HS8	V	**CR 594935**
203,20	*228,60*	*15,88*			
	9.250	0.625	HS8	R	**CR 592376**
	234,95	*15,88*			
	10.000	0.750	HS7	R	**CR 590326**
	254,00	*19,05*			
8.250	9.500	0.625	HS7	R	**CR 592180**
209,55	*241,30*	*15,88*			
	10.250	0.750	HS7	R	**CR 591929**
	260,35	*19,05*			
8.500	9.500	0.500	HS8	V	**CR 594745**
215,90	*241,30*	*12,70*			
	10.000	0.625	HS8	R	**CR 594318**
	254,00	*15,88*			

Please note that the product table only lists a selection of available sizes. These seals are made to order to fit any size request within the ranges stated in **table 9** on **page 31**

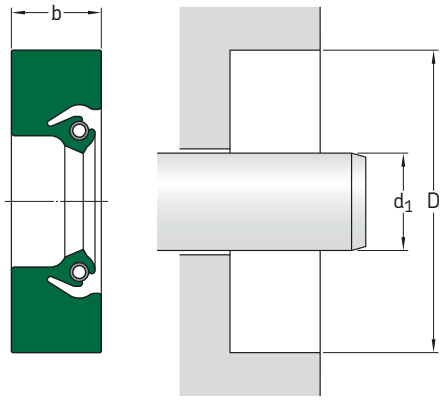

Please see **page 24–25** for housing bore requirements

Dimensions			Design	Lip material	Designation
shaft	bore	nominal seal width			
d_1	D	b			
in/*mm*			–	–	–
8.750	9.750	0.500	HS8	V	**CR 87440**
222,25	*247,65*	*12,70*			
	10.000	0.625	HS8	R	**CR 592627**
	254,00	*15,88*			
	10.750	0.750	HS7	R	**CR 597553**
	273,05	*19,05*			
8.938	9.938	0.625	HS7	R	**CR 595004**
227,03	*254,43*	*15,88*			
9.000	10.250	0.625	HS7	R	**CR 592581**
228,60	*260,35*	*15,88*			
	10.500	0.750	HS8	R	**CR 592600**
	266,70	*19,05*			
	10.674	0.703	HS8	R	**CR 592779**
	271,12	*17,86*			
9.250	11.250	0.625	HS7	R	**CR 593625**
234,95	*285,75*	*15,88*			
	11.250	0.750	HS8	R	**CR 592858**
	285,75	*19,05*			
9.438	10.688	0.625	HS7	R	**CR 592126**
239,73	*271,48*	*15,88*			
9.500	11.000	0.625	HS8	R	**CR 531331**
241,30	*279,40*	*15,88*			
	11.500	0.625	HS8	R	**CR 597507**
	292,10	*15,88*			
9.750	10.750	0.500	HS7	R	**CR 592988**
247,65	*273,05*	*12,70*			
	11.250	0.625	HS7	R	**CR 593385**
	285,75	*15,88*			
9.938	11.188	0.625	HS8	R	**CR 594753**
252,43	*284,18*	*15,88*			
	11.438	0.750	HS8	R	**CR 592731**
	290,53	*19,05*			

Dimensions			Design	Lip material	Designation
shaft	bore	nominal seal width			
d_1	D	b			
in/*mm*			–	–	–
10.000	11.000	0.562	HS8	R	**CR 1000018**
254,00	*279,40*	*14,28*			
	11.250	0.625	HS7	R	**CR 1000117**
	285,75	*15,88*			
	11.500	0.750	HS7	R	**CR 1000257**
	292,10	*19,05*			
	12.000	0.625	HS7	R	**CR 1000527**
	304,80	*15,88*			
	12.000	0.625	HS7	V	**CR 1000025**
	304,80	*15,88*			
10.125	11.750	0.750	HS8	R	**CR 1012338**
257,18	*298,45*	*19,05*			
10.188	11.188	0.500	HS7	R	**CR 1019017**
258,78	*284,18*	*12,70*			
10.250	11.250	0.625	HS7	R	**CR 1025017**
260,35	*285,75*	*15,88*			
	12.000	0.625	HS8	R	**CR 1025368**
	304,80	*15,88*			
10.438	11.688	0.875	HS8	R	**CR 1043148**
265,13	*296,88*	*22,23*			
10.500	11.500	0.500	HS8	R	**CR 1050018**
266,70	*292,10*	*12,70*			
	12.000	0.750	HS8	R	**CR 1050258**
	304,80	*19,05*			
	12.000	0.750	HS7	R	**CR 1050257**
	304,80	*19,05*			
10.710	12.511	0.625	HS8	R	**CR 1071448**
272,03	*317,78*	*15,88*			
10.875	12.875	0.578	HS6	R	**CR 527099**
276,23	*327,03*	*14,68*			
11.000	12.000	0.625	HS7	R	**CR 1100027**
279,40	*304,80*	*15,88*			
	12.500	0.750	HS8	R	**CR 1100258**
	317,50	*19,05*			
	12.500	0.750	HS7	R	**CR 1100257**
	317,50	*19,05*			
	13.000	0.750	HS8	R	**CR 1100538**
	330,20	*19,05*			

Please note that the product table only lists a selection of available sizes. These seals are made to order to fit any size request within the ranges stated in **table 9** on **page 31**

Radial shaft seals – HS6, HS7, HS8 – inch dimensions

d_1 **11.125 – 19.750** in

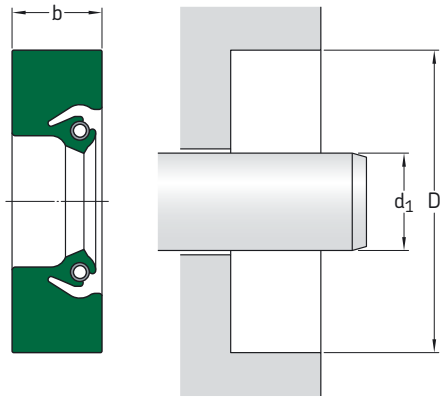

Please see **page 24–25** for housing bore requirements

Dimensions shaft d_1	bore D	nominal seal width b	Design	Lip material	Designation
in/*mm*			–	–	–
11.125	12.375	0.625	HS8	R	**CR 1113118**
282,58	*314,33*	*15,88*			
11.250	12.750	0.750	HS7	R	**CR 1125257**
285,75	*323,85*	*19,05*			
11.375	12.375	0.500	HS7	R	**CR 1138017**
288,93	*314,33*	*12,70*			
11.422	12.922	0.750	HS7	R	**CR 1142257**
290,12	*328,22*	*19,05*			
11.500	12.500	0.500	HS8	R	**CR 1150018**
292,10	*317,50*	*12,70*			
	13.000	0.750	HS8	R	**CR 1150258**
	330,20	*19,05*			
11.750	13.250	0.750	HS7	R	**CR 1175257**
298,45	*336,55*	*19,05*			
11.875	13.125	0.625	HS8	R	**CR 1188118**
301,63	*333,38*	*15,88*			
12.000	13.000	0.500	HS8	D	**CR 1200028**
304,80	*330,20*	*12,70*			
	13.500	0.750	HS8	R	**CR 1200258**
	342,90	*19,05*			
	14.000	0.813	HS8	R	**CR 1200558**
	355,60	*20,62*			
12.375	13.875	0.750	HS7	R	**CR 1238257**
314,33	*352,43*	*19,05*			
12.500	13.500	0.500	HS8	R	**CR 1250018**
317,50	*342,90*	*12,70*			
	14.000	0.750	HS7	R	**CR 1250257**
	355,60	*19,05*			
12.625	14.125	0.750	HS7	R	**CR 1263237**
320,68	*358,78*	*19,05*			
12.750	14.250	0.625	HS8	R	**CR 1275238**
323,85	*361,95*	*15,88*			
12.750	14.250	0.750	HS7	R	**CR 1275257**
323,85	*361,95*	*19,05*			

Dimensions shaft d_1	bore D	nominal seal width b	Design	Lip material	Designation
in/*mm*			–	–	–
13.000	14.500	0.625	HS7	R	**CR 1300237**
330,20	*368,30*	*15,88*			
	14.500	0.750	HS8	R	**CR 1300258**
	368,30	*19,05*			
	15.000	0.750	HS8	R	**CR 1300548**
	381,00	*19,05*			
13.125	15.125	0.750	HS8	R	**CR 592920**
333,38	*384,18*	*19,05*			
13.250	14.750	0.625	HS7	R	**CR 1325237**
336,55	*374,65*	*15,88*			
13.375	14.875	0.625	HS8	R	**CR 594057**
339,73	*377,83*	*15,88*			
13.500	15.000	0.750	HS8	R	**CR 1350258**
342,90	*381,00*	*19,05*			
	15.500	0.625	HS7	R	**CR 1350527**
	393,70	*15,88*			
13.750	15.250	0.750	HS7	R	**CR 1375257**
349,25	*387,35*	*19,05*			
13.875	15.375	0.750	HS7	R	**CR 1388257**
352,43	*390,53*	*19,05*			
14.000	15.000	0.500	HS8	R	**CR 1400018**
355,60	*381,00*	*12,70*			
	15.500	0.750	HS8	R	**CR 1400258**
	393,70	*19,05*			
	15.500	0.750	HS7	R	**CR 1400257**
	393,70	*19,05*			
	15.500	0.750	HS8	V	**CR 594261**
	393,70	*19,05*			
	16.000	0.813	HS7	R	**CR 1400557**
	406,40	*20,62*			
	16.000	1.000	HS8	R	**CR 1400588**
	406,40	*25,40*			
14.250	16.250	1.000	HS7	R	**CR 1425587**
361,95	*412,75*	*25,40*			
14.500	15.500	0.500	HS8	R	**CR 1450018**
368,30	*393,70*	*12,70*			

Please note that the product table only lists a selection of available sizes. These seals are made to order to fit any size request within the ranges stated in **table 9** on **page 31**

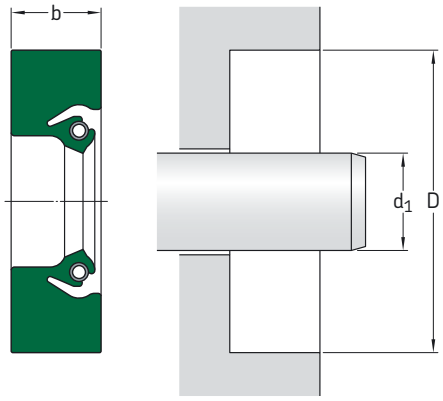

Please see **page 24–25** for housing bore requirements

Dimensions shaft d_1	bore D	nominal seal width b	Design	Lip material	Designation
in/*mm*			–	–	–
14.625	16.125	0.750	HS7	R	**CR 1463257**
371,48	*409,58*	*19,05*			
15.000	16.500	0.750	HS7	R	**CR 1500257**
381,00	*419,10*	*19,05*			
	17.000	0.813	HS8	R	**CR 1500558**
	431,80	*20,65*			
15.250	16.625	0.500	HS8	R	**CR 1525158**
387,35	*422,28*	*12,70*			
	16.750	0.750	HS7	R	**CR 1525257**
	425,45	*19,05*			
15.500	17.000	0.750	HS7	R	**CR 1550257**
393,70	*431,80*	*19,05*			
	17.500	0.813	HS7	R	**CR 1550557**
	444,50	*20,62*			
15.750	17.250	0.685	HS8	R	**CR 1575248**
400,05	*438,15*	*19,05*			
16.000	17.000	0.500	HS8	R	**CR 1600018**
406,40	*431,80*	*12,70*			
	17.000	0.500	HS8	D	**CR 1600019**
	431,80	*12,70*			
	17.500	0.750	HS8	R	**CR 1600258**
	444,50	*19,05*			
	18.000	0.750	HS8	R	**CR 1600578**
	457,20	*19,05*			
	18.000	0.813	HS8	R	**CR 1600558**
	457,20	*20,65*			
16.500	17.500	0.500	HS7	R	**CR 1650017**
419,10	*444,50*	*12,70*			
	18.500	0.813	HS7	R	**CR 1650557**
	469,90	*20,62*			
16.750	18.250	0.750	HS7	R	**CR 1675257**
425,45	*463,55*	*19,05*			
16.875	18.375	0.500	HS7	R	**CR 1688217**
428,63	*466,73*	*12,70*			
17.500	19.500	1.000	HS7	R	**CR 1750587**
444,50	*495,30*	*25,40*			

Dimensions shaft d_1	bore D	nominal seal width b	Design	Lip material	Designation
in/*mm*			–	–	–
17.716	19.716	0.813	HS7	R	**CR 1771557**
449,99	*500,79*	*20,65*			
17.750	19.750	0.813	HS7	R	**CR 1775557**
450,85	*501,65*	*20,62*			
18.000	19.000	0.500	HS8	R	**CR 1800018**
457,20	*482,60*	*12,70*			
	19.500	0.750	HS7	R	**CR 1800257**
	495,30	*19,05*			
	20.000	0.813	HS8	R	**CR 1800558**
	508,00	*20,62*			
18.250	19.750	0.750	HS7	R	**CR 1825257**
463,55	*501,65*	*19,05*			
	20.250	0.813	HS7	R	**CR 1825557**
	514,35	*20,62*			
18.375	20.375	0.813	HS8	R	**CR 1838558**
466,73	*517,53*	*20,65*			
	20.500	0.875	HS8	R	**CR 1837608**
	520,70	*22,23*			
18.500	20.000	0.750	HS8	D	**CR 1850248**
469,90	*508,00*	*19,05*			
	20.500	1.000	HS7	R	**CR 1850587**
	520,70	*25,40*			
18.750	20.250	0.750	HS7	R	**CR 1875257**
476,25	*514,35*	*19,05*			
18.937	20.937	0.813	HS7	R	**CR 1894557**
481,00	*531,80*	*20,65*			
19.000	20.500	0.750	HS8	R	**CR 1900258**
482,60	*520,70*	*19,05*			
	21.000	0.813	HS7	R	**CR 1900557**
	533,40	*20,62*			
19.500	21.500	0.813	HS7	R	**CR 1950557**
495,30	*546,10*	*20,62*			
	21.500	0.813	HS8	R	**CR 1950518**
	546,10	*20,65*			
19.750	21.750	0.625	HS8	R	**CR 1975528**
501,65	*552,45*	*15,88*			

Please note that the product table only lists a selection of available sizes. These seals are made to order to fit any size request within the ranges stated in **table 9** on **page 31**

Radial shaft seals – HS6, HS7, HS8 – inch dimensions

d_1 **20.000 – 171.900** in

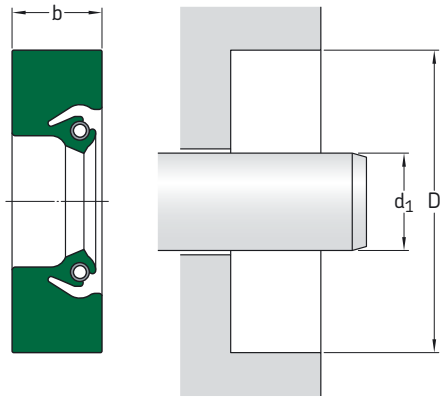

Please see **page 24–25** for housing bore requirements

Dimensions			Design	Lip material	Designation
shaft	bore	nominal seal width			
d_1	D	b			
in/*mm*			–	–	–
20.000	21.500	0.625	HS8	R	**CR 2000238**
508,00	*546,10*	*15,88*			
	21.500	0.750	HS8	R	**CR 2000258**
	546,10	*19,05*			
	22.000	0.625	HS7	R	**CR 2000527**
	558,80	*15,88*			
	22.000	1.000	HS7	R	**CR 2000587**
	558,80	*25,40*			
	22.125	0.916	HS8	R	**CR 2000648**
	561,98	*23,27*			
	22.125	0.916	HS8	D	**CR 2000649**
	561,98	*23,27*			
20.500	22.500	0.875	HS8	R	**CR 2050568**
520,70	*571,50*	*22,23*			
20.625	22.625	0.813	HS7	R	**CR 2063557**
523,88	*574,68*	*20,65*			
21.000	22.580	0.578	HS8	R	**CR 2100228**
533,40	*573,53*	*14,68*			
	23.000	0.750	HS8	R	**CR 2100518**
	584,20	*19,05*			
	23.000	0.813	HS8	V	**CR 594201**
	584,20	*20,65*			
	23.000	0.813	HS7	R	**CR 2100557**
	584,20	*20,62*			
22.000	23.500	0.750	HS7	R	**CR 2200257**
558,80	*596,90*	*19,05*			
	23.500	0.750	HS8	R	**CR 2200218**
	596,90	*19,05*			
	24.000	0.812	HS8	V	**CR 2200555**
	609,60	*20,63*			
	24.000	0.813	HS8	D	**CR 2200558**
	609,60	*20,62*			
	24.000	0.813	HS7	R	**CR 2200557**
	609,60	*20,62*			
22.250	24.250	0.813	HS7	R	**CR 2225557**
565,15	*615,95*	*20,62*			
22.500	24.500	0.813	HS7	R	**CR 2250557**
571,50	*622,30*	*20,62*			
22.638	24.638	0.750	HS8	D	**CR 2263548**
575,00	*625,80*	*19,00*			

Dimensions			Design	Lip material	Designation
shaft	bore	nominal seal width			
d_1	D	b			
in/*mm*			–	–	–
22.750	24.750	0.813	HS7	R	**CR 2275557**
577,85	*628,65*	*20,62*			
22.875	24.875	0.813	HS7	R	**CR 2288557**
581,03	*631,83*	*20,65*			
23.000	25.000	0.813	HS8	R	**CR 2300558**
584,20	*635,00*	*20,62*			
	25.000	0.813	HS8	D	**CR 2300559**
	635,00	*20,65*			
23.208	25.208	0.813	HS8	R	**CR 2320558**
589,48	*640,28*	*20,65*			
23.750	25.750	0.813	HS8	R	**CR 2575558**
603,25	*654,05*	*20,65*			
24.000	25.500	0.750	HS8	R	**CR 2400258**
609,60	*647,70*	*19,05*			
	25.500	0.750	HS7	R	**CR 2400257**
	647,70	*19,05*			
	26.000	1.000	HS8	D	**CR 2400598**
	660,40	*25,40*			
24.500	26.000	0.750	HS7	R	**CR 2450257**
622,30	*660,40*	*19,05*			
25.000	26.500	0.750	HS7	D	**CR 2500247**
635,00	*673,10*	*19,05*			
	27.000	0.813	HS7	R	**CR 2500557**
	685,80	*20,62*			
26.000	28.125	0.916	HS8	R	**CR 2600648**
660,40	*714,38*	*23,27*			
26.375	27.627	0.625	HS8	R	**CR 2637118**
669,93	*701,73*	*15,88*			
27.000	29.000	0.813	HS8	R	**CR 2700558**
685,80	*736,60*	*20,65*			
27.500	28.750	0.625	HS7	R	**CR 2750117**
698,50	*730,25*	*15,88*			
28.000	30.000	0.813	HS8	R	**CR 2800558**
711,20	*762,00*	*20,65*			

Please note that the product table only lists a selection of available sizes. These seals are made to order to fit any size request within the ranges stated in **table 9** on **page 31**

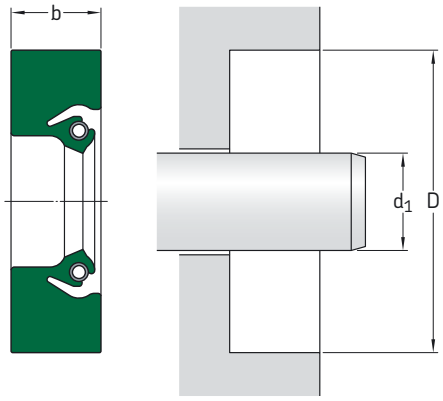

Please see
page 24–25
for housing bore
requirements

Dimensions shaft d_1	bore D	nominal seal width b	Design	Lip material	Designation
in/*mm*			–	–	–
28.875 *733,43*	30.875 *784,23*	0.813 *20,65*	HS7	R	**CR 2888557**
29.000 *736,60*	31.000 *787,40*	0.813 *20,65*	HS7	V	**CR 2900556**
29.750 *755,65*	31.750 *806,45*	0.813 *20,65*	HS8	R	**CR 2975558**
30.000 *762,00*	31.250 *793,75*	0.625 *15,88*	HS8	R	**CR 3000118**
	32.000 *812,80*	1.000 *25,40*	HS8	H	**CR 3000519**
30.750 *781,05*	31.750 *806,45*	0.500 *12,70*	HS7	R	**CR 3075017**
32.375 *822,33*	34.375 *873,13*	1.000 *25,40*	HS8	H	**CR 3237519**
32.500 *825,50*	34.500 *876,30*	0.916 *23,27*	HS7	R	**CR 3250577**
33.125 *841,38*	35.125 *892,18*	0.812 *20,63*	HS8	R	**CR 3312558**
34.500 *876,30*	36.500 *927,10*	0.813 *20,65*	HS7	R	**CR 3450557**
38.000 *965,20*	40.000 *1 016,00*	0.813 *20,65*	HS7	R	**CR 3800557**
38.500 *977,90*	40.500 *1 028,70*	0.813 *20,62*	HS7	R	**CR 3850557**
40.250 *1 022,35*	41.750 *1 060,45*	0.750 *19,05*	HS8	R	**CR 4025258**
48.000 *1 219,20*	50.000 *1 270,00*	0.813 *20,65*	HS8	R	**CR 4800518**
51.000 *1 295,40*	53.000 *1 346,20*	0.812 *20,63*	HS8	R	**CR 5100558**
53.000 *1 346,20*	54.875 *1 393,83*	0.813 *20,65*	HS8	R	**CR 5300488**

Dimensions shaft d_1	bore D	nominal seal width b	Design	Lip material	Designation
in/*mm*			–	–	–
54.000 *1 371,60*	56.000 *1 422,40*	0.813 *20,62*	HS7	R	**CR 5400557**
58.500 *1 485,90*	60.500 *1 536,70*	0.813 *20,65*	HS8	R	**CR 5850518**
60.250 *1 530,35*	62.313 *1 582,75*	0.750 *19,05*	HS8	R	**CR 531572**
62.598 *1 589,99*	64.598 *1 640,79*	0.813 *20,65*	HS7	R	**CR 6259557**
69.000 *1 752,60*	71.000 *1 803,40*	0.813 *20,65*	HS8	R	**CR 6900558**
72.500 *1 841,50*	74.500 *1 892,30*	0.813 *20,62*	HS8	R	**CR 7250558**
75.000 *1 905,00*	77.000 *1 955,80*	0.815 *20,70*	HS8	R	**CR 7500518**
76.000 *1 930,40*	78.000 *1 981,20*	0.813 *20,65*	HS8	R	**CR 594316**
81.000 *2 057,40*	83.000 *2 108,20*	0.813 *20,64*	HS8	R	**CR 8100558**
87.750 *2 228,85*	89.750 *2 279,65*	0.813 *20,65*	HS8	R	**CR 8775558**
94.750 *2 406,65*	97.000 *2 463,80*	0.688 *17,48*	HS8	R	**CR 9475658**
98.625 *2 505,08*	100.625 *2 555,88*	0.813 *20,65*	HS8	R	**CR 9862568**
106.000 *2 692,40*	107.000 *2 717,80*	0.500 *12,70*	HS8	R	**CR 594926**
125.000 *3 175,00*	126.250 *3 206,75*	0.625 *15,88*	HS8	R	**CR 595208**
171.900 *4 366,26*	173.876 *4 416,45*	0.812 *20,63*	HS8	R	**CR 595214**

Please note that the product table only lists a selection of available sizes. These seals are made to order to fit any size request within the ranges stated in **table 9** on **page 31**

Wear sleeves, series LDSLV – metric dimensions

d_1 **215 – 1 100,23** mm

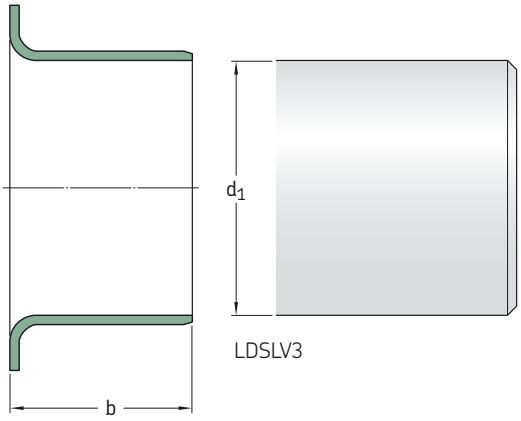

LDSLV3

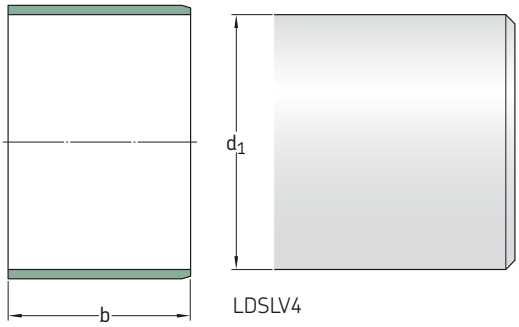

LDSLV4

Shaft diameter d_1	Sleeve width b	For nominal seal inside diameter	Design	Designation
mm		mm	–	–
215	25,4	220	LDSLV3	**CR 90179**
215,2	35	220	LDSLV3	**CR 87831**
220	25	225	LDSLV3	**CR 90806**
	40	225	LDSLV3	**CR 87914**
	50,8	225	LDSLV3	**CR 87915**
235,23	18	240	LDSLV4	**CR 90952**
240	17,5	250	LDSLV3	**CR 90156**
240,21	44	245	LDSLV4	**CR 87911**
245,2	63,5	250	LDSLV3	**CR 90766**
275	22	280	LDSLV4	**CR 90546**
280	45	285	LDSLV4	**CR 90437**
285,22	63,5	290	LDSLV4	**CR 90238**
295,2	32	300	LDSLV3	**CR 90114**
315,19	63,5	320	LDSLV4	**CR 90155**
320	63,5	325	LDSLV4	**CR 90198**
325,22	63,5	330	LDSLV4	**CR 90239**
335,22	39	340	LDSLV4	**CR 90777**
	50	340	LDSLV4	**CR 90792**
335,22	18	340	LDSLV4	**CR 87901**
	50	340	LDSLV4	**CR 90801**
340	50	345	LDSLV3	**CR 90113**
355,2	25,4	360	LDSLV4	**CR 90778**
	50	360	LDSLV4	**CR 90785**
360	44	365	LDSLV4	**CR 87500**
360,22	45	365	LDSLV4	**CR 90788**
365,2	20	370	LDSLV4	**CR 87531**
395,22	63,5	400	LDSLV4	**CR 87461**

Shaft diameter d_1	Sleeve width b	For nominal seal inside diameter	Design	Designation
mm		mm	–	–
405,23	50	410	LDSLV4	**CR 90042**
419,99	63,5	425	LDSLV3	**CR 97064**
435,2	63,5	440	LDSLV4	**CR 87916**
455	30	460	LDSLV4	**CR 90347**
	30	460	LDSLV4	**CR 90765**
455,2	50	460	LDSLV4	**CR 87504**
475,18	20	480	LDSLV4	**CR 87921**
494,44	24	500	LDSLV4	**CR 90259**
495,2	30	500	LDSLV4	**CR 87503**
503,25	24	508	LDSLV4	**CR 90149**
530	20	535	LDSLV4	**CR 87783**
535,23	63	540	LDSLV4	**CR 90802**
555,2	63,5	560	LDSLV4	**CR 90075**
575,23	63,5	580	LDSLV4	**CR 90951**
585,22	54,99	590	LDSLV4	**CR 90292**
595,2	58,17	600	LDSLV3	**CR 90120**
	63,5	600	LDSLV4	**CR 89997**
595,22	50	600	LDSLV3	**CR 90241**
645,2	64	650	LDSLV4	**CR 90004**
645,24	63,5	650	LDSLV3	**CR 87817**
665,2	45	670	LDSLV4	**CR 90799**
685,22	63,5	960	LDSLV4	**CR 90953**
714,81	50	720	LDSLV4	**CR 87820**
735,23	63	740	LDSLV4	**CR 89949**
755,19	63,5	760	LDSLV3	**CR 87981**

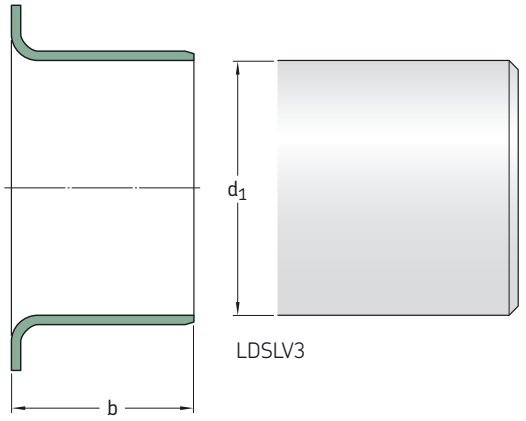

LDSLV3

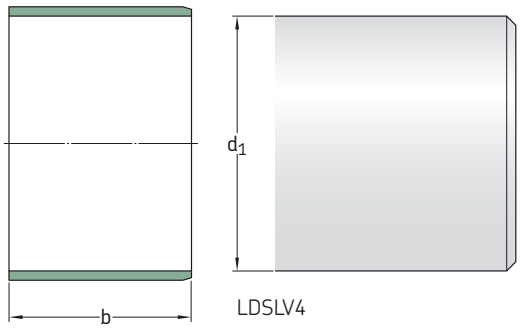

LDSLV4

Shaft diameter d_1	Sleeve width b	For nominal seal inside diameter	Design	Designation
mm		mm	–	–
865,23	63,5	870	LDSLV4	**CR 90221**
875,18	63,5	880	LDSLV4	**CR 90103**
1 015,20	25	1 020	LDSLV4	**CR 90786**
1 049,33	60	1 054	LDSLV4	**CR 89947**
1 100,23	63	1 105	LDSLV4	**CR 89946**

Wear sleeves, series LDSLV – inch dimensions

d_1 **8.313 – 11.968** in

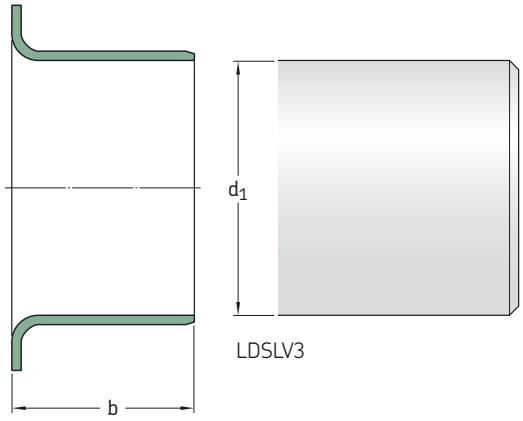

LDSLV3

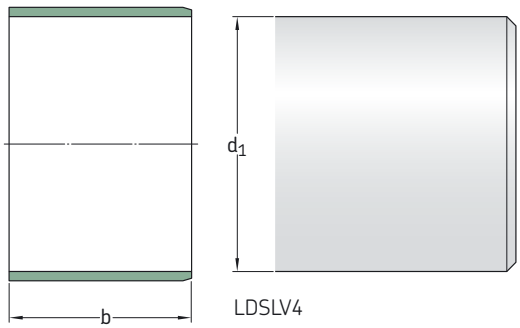

LDSLV4

Shaft diameter d_1	Sleeve width b	For nominal seal inside diameter	Design	Designation
in/*mm*		in/*mm*	–	–
8.313 *211,15*	1.250 *31,75*	8.500 *215,90*	LDSLV4	**CR 85885**
8.353 *212,17*	1.500 *38,10*	8.541 *216,94*	LDSLV4	**CR 86907**
8.500 *215,90*	1.000 *25,40*	8.688 *220,68*	LDSLV3	**CR 85158**
8.625 *219,08*	2.750 *69,85*	8.813 *223,85*	LDSLV3	**CR 85643**
8.661 *220,00*	1.000 *25,40*	8.849 *224,76*	LDSLV4	**CR 87319**
8.687 *220,65*	2.250 *57,15*	8.875 *225,43*	LDSLV3	**CR 86543**
8.750 *222,25*	1.500 *38,10*	8.938 *227,03*	LDSLV3	**CR 87196**
8.812 *223,82*	2.000 *50,80*	9.000 *228,60*	LDSLV4	**CR 86551**
8.813 *223,85*	1.000 *25,40*	9.000 *228,60*	LDSLV3	**CR 85688**
8.866 *225,19*	2.500 *63,50*	9.054 *229,97*	LDSLV4	**CR 87166**
8.867 *225,22*	1.000 *25,40*	9.055 *230,00*	LDSLV4	**CR 87462**
8.875 *225,43*	1.250 *31,75*	9.063 *230,20*	LDSLV3	**CR 85973**
8.875 *225,43*	1.250 *31,75*	9.063 *230,20*	LDSLV4	**CR 87526**
8.938 *227,03*	2.500 *63,50*	9.126 *231,80*	LDSLV4	**CR 86546**
9.000 *228,60*	1.000 *25,40*	9.188 *233,38*	LDSLV3	**CR 87555**
9.055 *230,00*	1.000 *25,40*	9.243 *234,77*	LDSLV3	**CR 89943**
9.063 *230,20*	1.500 *38,10*	9.250 *234,95*	LDSLV4	**CR 85931**

Shaft diameter d_1	Sleeve width b	For nominal seal inside diameter	Design	Designation
in/*mm*		in/*mm*	–	–
9.125 *231,78*	1.000 *25,40*	9.313 *236,55*	LDSLV4	**CR 86547**
	1.500 *38,10*	9.313 *236,55*	LDSLV4	**CR 90130**
9.250 *234,95*	0.875 *22,23*	9.438 *239,73*	LDSLV4	**CR 84643**
9.260 *235,20*	1.102 *28,00*	9.448 *239,98*	LDSLV4	**CR 87789**
9.313 *236,55*	1.500 *38,10*	9.500 *241,30*	LDSLV3	**CR 85377**
9.449 *240,01*	1.181 *30,00*	9.637 *244,78*	LDSLV4	**CR 87144**
9.500 *241,30*	2.500 *63,50*	9.688 *246,08*	LDSLV4	**CR 86562**
9.500 *241,30*	1.000 *25,40*	9.688 *246,08*	LDSLV3	**CR 86633**
9.563 *242,90*	1.000 *25,40*	9.750 *247,65*	LDSLV4	**CR 85073**
	2.000 *50,80*	9.750 *247,65*	LDSLV4	**CR 85397**
9.750 *247,65*	1.438 *36,53*	9.938 *252,43*	LDSLV4	**CR 84965**
9.750 *252,43*	2.250 *57,15*	9.938 *252,43*	LDSLV4	**CR 85045**
9.813 *249,24*	1.125 *28,58*	10.000 *254,00*	LDSLV4	**CR 86413**
	2.000 *50,80*	10.000 *254,00*	LDSLV3	**CR 84156**
9.835 *249,80*	1.575 *40,00*	10.023 *254,58*	LDSLV4	**CR 90773**
10.000 *254,00*	1.000 *25,40*	10.188 *258,78*	LDSLV3	**CR 90070**
10.063 *255,60*	2.250 *57,15*	10.250 *260,35*	LDSLV4	**CR 86000**
10.188 *258,78*	1.125 *28,58*	10.375 *263,53*	LDSLV4	**CR 84962**

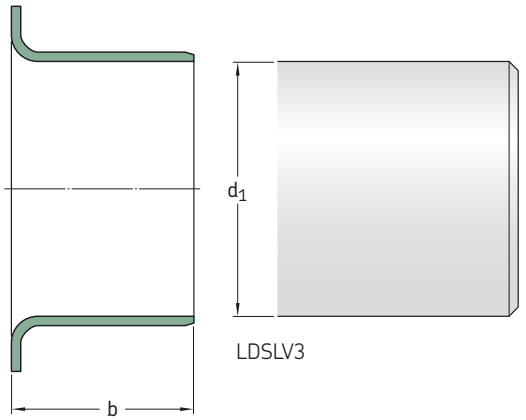

LDSLV3

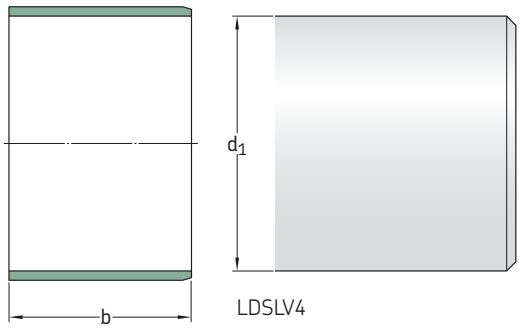

LDSLV4

Shaft diameter d_1	Sleeve width b	For nominal seal inside diameter	Design	Designation
in/*mm*		in/*mm*	–	–
10.236 *260,00*	1.968 *50,00*	10.424 *264,77*	LDSLV3	**CR 87738**
10.313 *261,95*	2.000 *50,80*	10.500 *266,70*	LDSLV4	**CR 85629**
	2.250 *57,15*	10.500 *266,70*	LDSLV3	**CR 85191**
10.441 *265,20*	2.165 *55,00*	10.629 *269,98*	LDSLV4	**CR 86798**
10.500 *266,70*	2.750 *69,85*	10.688 *271,48*	LDSLV4	**CR 86013**
10.557 *268,15*	2.250 *44,45*	10.745 *272,92*	LDSLV4	**CR 85491**
10.562 *268,27*	0.984 *24,99*	10.750 *273,05*	LDSLV4	**CR 90800**
	1.750 *44,45*	10.750 *273,05*	LDSLV4	**CR 86468**
	1.813 *46,05*	10.750 *273,05*	LDSLV4	**CR 86544**
10.563 *268,30*	1.500 *38,10*	10.563 *268,30*	LDSLV4	**CR 87768**
10.750 *273,05*	2.500 *63,50*	10.938 *277,83*	LDSLV4	**CR 86435**
10.813 *274,64*	1.000 *25,40*	11.000 *279,40*	LDSLV3	**CR 81389**
	2.000 *50,80*	11.000 *279,40*	LDSLV4	**CR 85033**
10.846 *275,50*	0.709 *18,00*	11.034 *280,26*	LDSLV4	**CR 86601**
10.875 *276,23*	2.000 *50,80*	11.063 *281,00*	LDSLV4	**CR 84510**
11.000 *279,40*	1.500 *38,10*	11.188 *284,18*	LDSLV4	**CR 86486**
	2.500 *63,50*	11.188 *284,18*	LDSLV4	**CR 86454**
11.023 *280,00*	1.181 *30,00*	11.212 *284,78*	LDSLV4	**CR 87142**

Shaft diameter d_1	Sleeve width b	For nominal seal inside diameter	Design	Designation
in/*mm*		in/*mm*	–	–
11.031 *280,20*	1.260 *32,00*	11.219 *284,96*	LDSLV4	**CR 87525**
11.062 *280,77*	1.750 *44,45*	11.250 *285,75*	LDSLV4	**CR 85469**
11.187 *284,15*	1.250 *31,75*	11.375 *288,93*	LDSLV4	**CR 86269**
11.188 *284,18*	2.250 *57,15*	11.375 *288,93*	LDSLV4	**CR 85212**
11.190 *284,23*	2.250 *57,15*	11.378 *289,00*	LDSLV4	**CR 87566**
11.313 *287,34*	1.500 *38,10*	11.500 *292,10*	LDSLV4	**CR 84094**
11.375 *288,93*	2.250 *57,15*	11.563 *293,70*	LDSLV4	**CR 86145**
11.417 *290,00*	1.750 *44,45*	11.605 *294,77*	LDSLV4	**CR 86441**
11.500 *292,10*	0.750 *19,05*	11.688 *296,88*	LDSLV4	**CR 90761**
11.562 *293,68*	1.000 *25,40*	11.562 *293,67*	LDSLV4	**CR 90333**
11.623 *295,22*	1.417 *36,00*	11.811 *300,00*	LDSLV3	**CR 87875**
11.750 *298,45*	2.375 *60,33*	11.938 *303,23*	LDSLV3	**CR 87872**
11.812 *300,03*	1.125 *28,56*	12.000 *304,80*	LDSLV4	**CR 86687**
11.813 *300,05*	1.500 *38,10*	12.000 *304,80*	LDSLV4	**CR 85979**
	2.250 *57,15*	12.000 *304,80*	LDSLV3	**CR 84819**
	2.750 *69,85*	12.000 *304,80*	LDSLV4	**CR 85844**
11.968 *304,00*	0.709 *18,01*	12.156 *308,76*	LDSLV4	**CR 86600**

Wear sleeves, series LDSLV – inch dimensions

d_1 **12.000 – 20.813** in

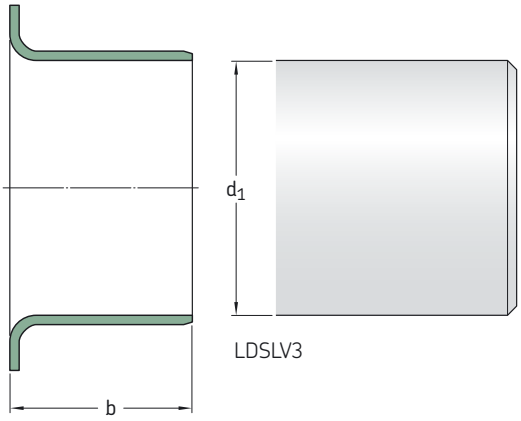

LDSLV3

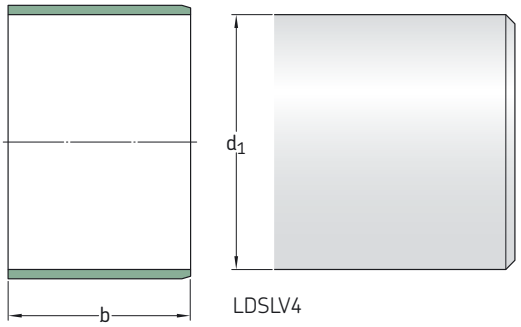

LDSLV4

Shaft diameter d_1	Sleeve width b	For nominal seal inside diameter	Design	Designation
in/*mm*		in/*mm*	–	–
12.000 *304,80*	2.250 *57,15*	12.188 *309,58*	LDSLV4	**CR 85577**
	2.250 *57,15*	12.188 *309,58*	LDSLV3	**CR 87406**
12.063 *306,40*	0.625 *15,88*	12.250 *311,15*	LDSLV4	**CR 85418**
	2.500 *63,50*	12.250 *311,15*	LDSLV3	**CR 86404**
12.312 *312,73*	1.500 *38,10*	12.500 *317,50*	LDSLV4	**CR 90174**
12.313 *312,74*	0.750 *19,05*	12.500 *317,50*	LDSLV4	**CR 83760**
12.500 *317,50*	2.125 *53,98*	12.688 *322,28*	LDSLV3	**CR 86169**
12.598 *320,00*	0.980 *25,00*	12.786 *324,76*	LDSLV3	**CR 87434**
12.750 *323,85*	0.688 *17,48*	12.938 *328,63*	LDSLV4	**CR 87513**
	1.125 *28,58*	12.938 *328,63*	LDSLV3	**CR 82099**
	1.500 *38,10*	12.938 *328,63*	LDSLV3	**CR 90143**
12.813 *325,44*	1.000 *25,40*	13.000 *330,20*	LDSLV4	**CR 86258**
	1.375 *34,93*	13.000 *330,20*	LDSLV4	**CR 84263**
	2.000 *50,80*	13.000 *330,20*	LDSLV3	**CR 84390**
	2.500 *63,50*	13.000 *330,20*	LDSLV4	**CR 86722**
13.000 *330,20*	1.750 *25,40*	13.188 *334,98*	LDSLV4	**CR 85535**
13.063 *331,80*	1.125 *28,58*	13.250 *336,55*	LDSLV4	**CR 84963**
13.313 *338,15*	0.813 *20,65*	13.500 *342,90*	LDSLV4	**CR 86688**
	1.500 *38,10*	13.500 *342,90*	LDSLV4	**CR 87463**
	2.000 *50,80*	13.500 *342,90*	LDSLV3	**CR 85852**
13.813 *350,84*	1.500 *38,10*	14.000 *355,60*	LDSLV3	**CR 81390**
	2.000 *50,80*	14.000 *355,60*	LDSLV4	**CR 85179**
14.000 *355,60*	1.375 *34,93*	14.188 *360,38*	LDSLV3	**CR 89951**
	1.500 *38,10*	14.188 *360,38*	LDSLV3	**CR 81352**
14.173 *359,99*	1.000 *25,40*	14.361 *364,77*	LDSLV4	**CR 87445**
14.313 *363,55*	1.500 *38,10*	14.500 *368,30*	LDSLV4	**CR 86429**
14.438 *366,73*	2.500 *63,50*	14.625 *371,48*	LDSLV3	**CR 86403**
14.500 *368,30*	1.000 *25,40*	14.688 *373,08*	LDSLV4	**CR 85914**
14.813 *376,24*	1.500 *38,10*	15.000 *381,00*	LDSLV4	**CR 87723**
	2.125 *54,00*	15.000 *381,00*	LDSLV3	**CR 81391**
15.000 *381,00*	1.000 *25,40*	15.188 *385,78*	LDSLV4	**CR 87247**
15.062 *382,58*	0.750 *19,05*	15.250 *387,35*	LDSLV4	**CR 90272**
15.066 *382,68*	1.000 *25,40*	15.254 *387,45*	LDSLV3	**CR 87871**
15.188 *385,77*	2.500 *63,50*	15.375 *390,53*	LDSLV4	**CR 87569**
15.250 *387,35*	0.750 *19,05*	15.438 *392,13*	LDSLV3	**CR 84964**
15.560 *395,22*	0.906 *23,01*	15.750 *400,05*	LDSLV4	**CR 85582**
15.812 *401,63*	2.500 *63,50*	16.000 *406,40*	LDSLV3	**CR 87634**

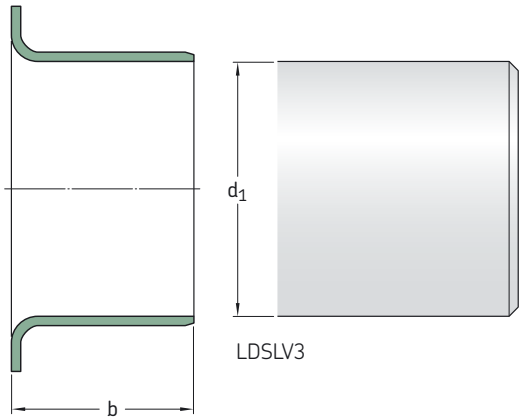

LDSLV3

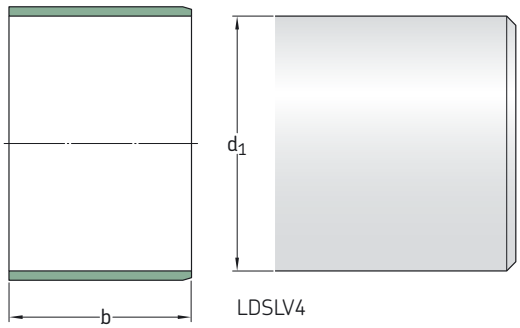

LDSLV4

Shaft diameter d_1	Sleeve width b	For nominal seal inside diameter	Design	Designation
in/*mm*		in/*mm*	–	–
15.813	2.000	16.000	LDSLV4	**CR 85181**
401,65	*50,80*	*406,40*		
	2.000	16.000	LDSLV3	**CR 87446**
	50,80	*406,40*		
	2.500	16.000	LDSLV4	**CR 86407**
	63,50	*406,40*		
15.998	2.250	16.188	LDSLV3	**CR 85908**
406,35	*57,15*	*411,18*		
16.000	2.000	16.188	LDSLV3	**CR 81354**
406,40	*50,80*	*411,18*		
16.063	0.500	16.250	LDSLV4	**CR 87613**
408,00	*12,70*	*412,75*		
	1.250	16.250	LDSLV4	**CR 86175**
	31,75	*412,75*		
	1.300	16.250	LDSLV4	**CR 86426**
	33,02	*412,75*		
	2.000	16.250	LDSLV4	**CR 86575**
	50,80	*412,75*		
16.313	2.000	16.500	LDSLV4	**CR 84697**
414,35	*50,80*	*419,10*		
16.750	1.500	16.938	LDSLV4	**CR 87585**
425,45	*38,10*	*430,23*		
16.812	1.000	17.000	LDSLV4	**CR 86737**
427,02	*25,40*	*431,80*		
16.813	2.250	17.000	LDSLV4	**CR 84616**
427,00	*57,15*	*431,80*		
17.250	2.000	17.438	LDSLV4	**CR 84576**
438,15	*50,80*	*442,93*		
17.250	1.000	17.438	LDSLV4	**CR 90779**
438,15	*25,40*	*442,93*		
17.313	1.500	17.500	LDSLV4	**CR 86430**
439,75	*38,10*	*444,50*		
17.449	2.000	17.637	LDSLV4	**CR 85762**
443,20	*50,80*	*447,98*		
17.500	1.250	17.688	LDSLV4	**CR 90770**
444,50	*31,75*	*449,28*		

Shaft diameter d_1	Sleeve width b	For nominal seal inside diameter	Design	Designation
in/*mm*		in/*mm*	–	–
17.543	2.362	17.731	LDSLV4	**CR 86799**
445,59	*60,00*	*450,37*		
17.750	1.250	17.938	LDSLV4	**CR 90774**
450,85	*31,75*	*455,63*		
	2.500	17.938	LDSLV3	**CR 86631**
	63,50	*455,63*		
17.812	2.125	18.000	LDSLV4	**CR 87271**
452,42	*53,98*	*457,20*		
17.813	2.500	18.000	LDSLV3	**CR 86405**
452,45	*63,50*	*457,20*		
18.163	2.000	18.350	LDSLV4	**CR 86343**
461,34	*50,80*	*466,09*		
18.312	1.191	18.500	LDSLV4	**CR 90790**
465,13	*30,25*	*469,90*		
18.813	1.750	19.000	LDSLV4	**CR 86563**
477,82	*44,45*	*482,60*		
	2.250	19.000	LDSLV4	**CR 87015**
	57,15	*482,60*		
	2.500	19.000	LDSLV4	**CR 86716**
	63,50	*482,60*		
19.496	2.362	19.684	LDSLV4	**CR 87631**
495,20	*60,00*	*499,97*		
19.497	1.575	19.497	LDSLV4	**CR 87785**
495,20	*40,00*	*495,22*		
19.500	1.250	19.688	LDSLV4	**CR 90769**
495,30	*31,75*	*500,08*		
19.563	2.750	19.750	LDSLV4	**CR 85654**
496,90	*69,85*	*501,65*		
19.813	1.250	20.000	LDSLV4	**CR 84781**
503,25	*31,75*	*508,00*		
20.312	1.000	20.500	LDSLV4	**CR 86739**
515,92	*25,40*	*520,70*		
20.813	2.125	21.000	LDSLV4	**CR 85367**
528,65	*53,98*	*533,40*		
	1.250	21.000	LDSLV3	**CR 85800**
	31,75	*533,40*		
	2.500	21.000	LDSLV4	**CR 87298**
	63,50	*533,40*		

Wear sleeves, series LDSLV – inch dimensions

d_1 **20.865 – 42.500** in

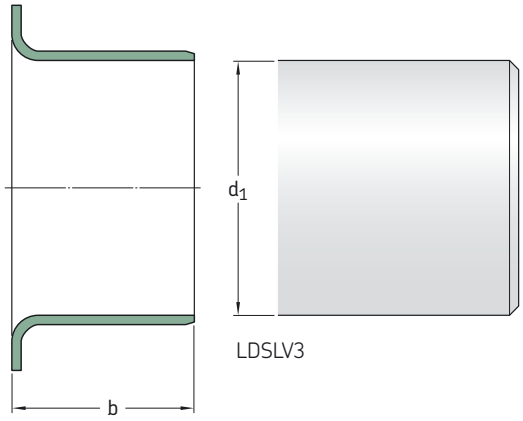

LDSLV3

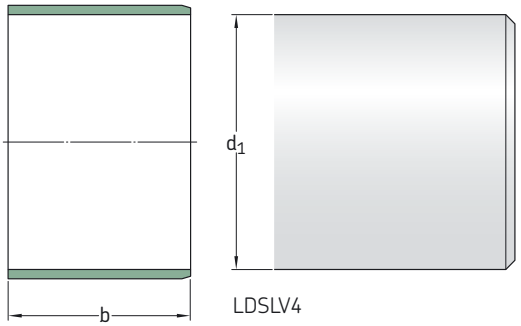

LDSLV4

Shaft diameter d_1	Sleeve width b	For nominal seal inside diameter	Design	Designation
in/*mm*		in/*mm*	–	–
20.865 *529,97*	2.250 *57,15*	21.053 *534,75*	LDSLV4	**CR 90805**
20.990 *533,15*	2.250 *57,15*	21.178 *537,92*	LDSLV3	**CR 84579**
21.000 *533,40*	2.250 *57,15*	21.188 *538,18*	LDSLV4	**CR 87090**
21.803 *553,80*	2.362 *60,00*	21.991 *558,57*	LDSLV4	**CR 87069**
21.813 *554,04*	2.250 *57,15*	22.000 *558,80*	LDSLV4	**CR 84590**
22.250 *565,15*	1.000 *25,40*	22.438 *569,93*	LDSLV3	**CR 85691**
22.303 *566,50*	2.362 *60,00*	22.491 *571,27*	LDSLV4	**CR 87070**
22.313 *566,75*	1.250 *31,75*	22.500 *571,50*	LDSLV4	**CR 85907**
22.812 *579,43*	2.000 *50,80*	23.000 *584,20*	LDSLV4	**CR 90163**
23.000 *584,20*	2.000 *50,80*	23.188 *588,98*	LDSLV4	**CR 90146**
23.434 *595,22*	0.984 *25,00*	23.434 *595,22*	LDSLV4	**CR 87777**
23.687 *601,65*	1.950 *49,53*	23.875 *606,43*	LDSLV4	**CR 87907**
23.812 *604,83*	0.750 *19,05*	24.000 *609,60*	LDSLV4	**CR 87922**
	2.500 *63,50*	24.000 *609,60*	LDSLV4	**CR 87960**
25.000 *635,00*	2.500 *63,50*	25.188 *639,78*	LDSLV4	**CR 86567**
25.312 *642,93*	2.500 *63,50*	25.500 *647,70*	LDSLV4	**CR 87802**
25.313 *642,95*	2.000 *50,80*	25.500 *647,70*	LDSLV4	**CR 86091**
26.000 *660,40*	2.250 *63,50*	26.188 *665,18*	LDSLV3	**CR 86640**
26.312 *668,33*	1.375 *34,93*	26.500 *673,10*	LDSLV4	**CR 90809**
26.813 *681,05*	1.250 *31,75*	27.000 *685,80*	LDSLV4	**CR 85384**
	2.250 *57,15*	27.000 *685,80*	LDSLV4	**CR 85531**
27.000 *685,80*	2.000 *50,80*	27.188 *690,58*	LDSLV4	**CR 86841**
27.063 *687,40*	2.250 *57,15*	27.250 *692,15*	LDSLV4	**CR 84764**
27.313 *693,75*	2.250 *57,15*	27.500 *698,50*	LDSLV4	**CR 85011**
27.500 *695,50*	2.250 *57,15*	27.688 *703,28*	LDSLV4	**CR 84711**
27.812 *706,43*	2.500 *63,50*	28.000 *711,20*	LDSLV4	**CR 87421**
28.312 *719,13*	2.313 *58,75*	28.500 *723,90*	LDSLV3	**CR 87623**
28.813 *731,84*	2.250 *57,15*	29.000 *736,60*	LDSLV4	**CR 84641**
29.813 *757,24*	2.250 *57,15*	30.000 *762,00*	LDSLV4	**CR 84642**
30.000 *762,00*	2.500 *63,50*	30.188 *766,78*	LDSLV3	**CR 86641**
30.309 *769,85*	1.375 *34,93*	30.497 *774,62*	LDSLV4	**CR 87530**
30.312 *769,93*	2.500 *63,50*	30.500 *774,70*	LDSLV3	**CR 87842**
30.813 *782,65*	2.000 *50,80*	31.000 *787,40*	LDSLV4	**CR 85039**
31.812 *808,03*	2.500 *63,50*	32.000 *812,80*	LDSLV4	**CR 90810**

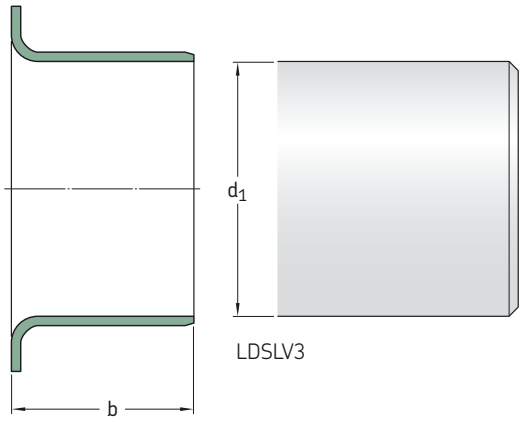

LDSLV3

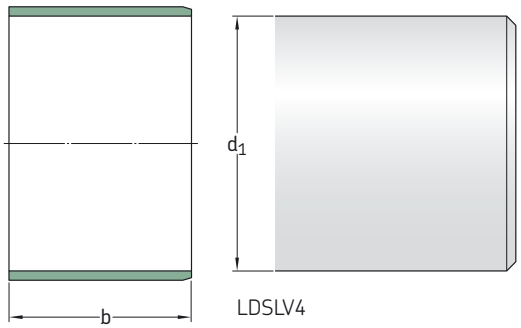

LDSLV4

Shaft diameter d_1	Sleeve width b	For nominal seal inside diameter	Design	Designation
in/*mm*		in/*mm*	–	–
32.313 *820,75*	2.000 *50,80*	32.500 *825,50*	LDSLV4	**CR 86090**
32.812 *833,43*	2.220 *56,39*	33.000 *838,20*	LDSLV4	**CR 87850**
33.313 *846,15*	2.625 *66,68*	33.500 *850,90*	LDSLV4	**CR 84730**
34.312 *871,58*	1.750 *44,45*	34.500 *876,30*	LDSLV4	**CR 87529**
35.313 *896,95*	2.500 *63,50*	35.500 *901,70*	LDSLV4	**CR 85814**
35.812 *909,63*	1.500 *38,10*	36.000 *914,40*	LDSLV4	**CR 90332**
36.375 *923,93*	2.500 *63,50*	36.555 *928,50*	LDSLV4	**CR 86111**
36.813 *935,05*	2.500 *63,50*	37.000 *939,80*	LDSLV4	**CR 86458**
37.813 *960,45*	1.500 *38,10*	38.000 *965,20*	LDSLV4	**CR 86973**
38.000 *965,20*	1.500 *38,10*	38.188 *969,98*	LDSLV4	**CR 86840**
38.500 *977,90*	1.500 *38,10*	38.688 *982,68*	LDSLV4	**CR 81753**
38.813 *985,85*	2.125 *53,98*	39.000 *990,60*	LDSLV4	**CR 85123**
39.813 *1 011,24*	2.125 *54,00*	40.000 *1 016,00*	LDSLV4	**CR 81826**
41.312 *1 049,33*	1.968 *49,99*	41.500 *1 054,10*	LDSLV4	**CR 89948**
42.063 *1 068,40*	2.125 *53,98*	42.250 *1 073,15*	LDSLV4	**CR 85038**
42.125 *1 070,00*	2.125 *53,98*	42.313 *1 074,75*	LDSLV4	**CR 87054**
42.312 *1 074,72*	1.250 *31,75*	42.500 *1 079,50*	LDSLV4	**CR 87379**
42.500 *1 079,50*	1.250 *31,75*	42.688 *1 084,28*	LDSLV4	**CR 87392**

SKF – the knowledge engineering company

From the company that invented the self-aligning ball bearing more than 100 years ago, SKF has evolved into a knowledge engineering company that is able to draw on five technology platforms to create unique solutions for its customers. These platforms include bearings, bearing units and seals, of course, but extend to other areas including: lubricants and lubrication systems, critical for long bearing life in many applications; mechatronics that combine mechanical and electronics knowledge into systems for more effective linear motion and sensorized solutions; and a full range of services, from design and logistics support to conditioning monitoring and reliability systems.

Though the scope has broadened, SKF continues to maintain the world's leadership in the design, manufacture and marketing of rolling bearings, as well as complementary products such as radial seals. SKF also holds an increasingly important position in the market for linear motion products, high-precision aerospace bearings, machine tool spindles and plant maintenance services.

The SKF Group is globally certified to ISO 14001, the international standard for environmental management, as well as OHSAS 18001, the health and safety management standard. Individual divisions have been approved for quality certification in accordance with either ISO 9000 or QS 9000.

With some 100 manufacturing sites worldwide and sales companies in 70 countries, SKF is a truly international corporation. In addition, our distributors and dealers in some 15 000 locations around the world, an e-business marketplace and a global distribution system put SKF close to customers for the supply of both products and services. In essence, SKF solutions are available wherever and whenever customers need them. Overall, the SKF brand and the corporation are stronger than ever. As the knowledge engineering company, we stand ready to serve you with world-class product competencies, intellectual resources, and the vision to help you succeed.



© Airbus – photo: e*m company, H. Goussé

Evolving by-wire technology
SKF has a unique expertise in fast-growing by-wire technology, from fly-by-wire, to drive-by-wire, to work-by-wire. SKF pioneered practical fly-by-wire technology and is a close working partner with all aerospace industry leaders. As an example, virtually all aircraft of the Airbus design use SKF by-wire systems for cockpit flight control.

SKF is also a leader in automotive by-wire technology, and has partnered with automotive engineers to develop two concept cars, which employ SKF mechatronics for steering and braking. Further by-wire development has led SKF to produce an all-electric forklift truck, which uses mechatronics rather than hydraulics for all controls.

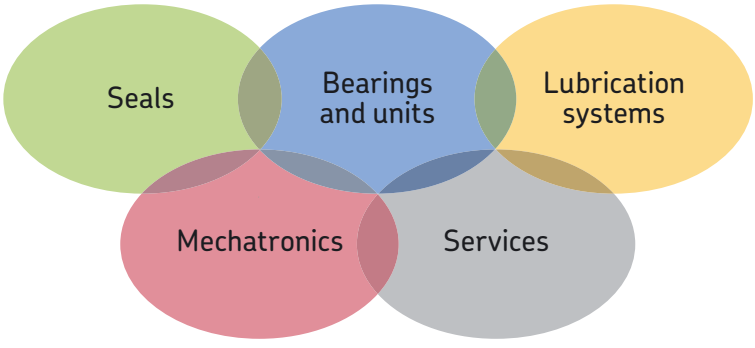





Harnessing wind power
The growing industry of wind-generated electric power provides a source of clean, green electricity. SKF is working closely with global industry leaders to develop efficient and trouble-free turbines, providing a wide range of large, highly specialized bearings and condition monitoring systems to extend equipment life of wind farms located in even the most remote and inhospitable environments.



Working in extreme environments
In frigid winters, especially in northern countries, extreme sub-zero temperatures can cause bearings in railway axleboxes to seize due to lubrication starvation. SKF created a new family of synthetic lubricants formulated to retain their lubrication viscosity even at these extreme temperatures. SKF knowledge enables manufacturers and end user customers to overcome the performance issues resulting from extreme temperatures, whether hot or cold. For example, SKF products are at work in diverse environments such as baking ovens and instant freezing in food processing plants.



Developing a cleaner cleaner
The electric motor and its bearings are the heart of many household appliances. SKF works closely with appliance manufacturers to improve their products' performance, cut costs, reduce weight, and reduce energy consumption. A recent example of this cooperation is a new generation of vacuum cleaners with substantially more suction. SKF knowledge in the area of small bearing technology is also applied to manufacturers of power tools and office equipment.



Maintaining a 350 km/h R&D lab
In addition to SKF's renowned research and development facilities in Europe and the United States, Formula One car racing provides a unique environment for SKF to push the limits of bearing technology. For over 50 years, SKF products, engineering and knowledge have helped make Scuderia Ferrari a formidable force in F1 racing. (The average racing Ferrari utilizes more than 150 SKF components.) Lessons learned here are applied to the products we provide to automakers and the aftermarket worldwide.



Delivering Asset Efficiency Optimization
Through SKF Reliability Systems, SKF provides a comprehensive range of asset efficiency products and services, from condition monitoring hardware and software to maintenance strategies, engineering assistance and machine reliability programmes. To optimize efficiency and boost productivity, some industrial facilities opt for an Integrated Maintenance Solution, in which SKF delivers all services under one fixed-fee, performance-based contract.



Planning for sustainable growth
By their very nature, bearings make a positive contribution to the natural environment, enabling machinery to operate more efficiently, consume less power, and require less lubrication. By raising the performance bar for our own products, SKF is enabling a new generation of high-efficiency products and equipment. With an eye to the future and the world we will leave to our children, the SKF Group policy on environment, health and safety, as well as the manufacturing techniques, are planned and implemented to help protect and preserve the earth's limited natural resources. We remain committed to sustainable, environmentally responsible growth.



® SKF is a registered trademark of the SKF Group.

™ DURATEMP is a trademark of the SKF Group.

© SKF Group 2008
The contents of this publication are the copyright of the publisher and may not be reproduced (even extracts) unless permission is granted. Every care has been taken to ensure the accuracy of the information contained in this publication but no liability can be accepted for any loss or damage whether direct, indirect or consequential arising out of the use of the information contained herein.

The data in this publication may differ from that shown in earlier publications because of redesign, technological developments or revised methods of calculation. SKF reserves the right to make continuing improvements to SKF products without prior notice with respect to materials, design and manufacturing methods, as well as changes necessitated by technological developments.

Publication **6404 EN** · March 2008

This publication supersedes publications 5399 E and 5243 E/A.

Printed in Sweden on environmentally friendly paper.

skf.com